Digital Indicating Resistivity Meter

AER-102-SE

Instruction Manual

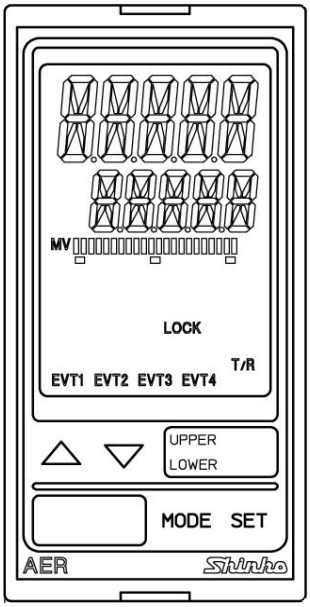

Shinko

Preface

Thank you for purchasing our AER-102-SE, Digital Indicating Resistivity Meter.

This manual contains instructions for the mounting, functions, operations and notes when operating the AER-102-SE. To ensure safe and correct use, thoroughly read and understand this manual before using this instrument.

To prevent accidents arising from the misuse of this instrument, please ensure the operator receives this manual.

Characters Used in This Manual

Indication													
Number, ℃/℉	-1	0	1	2	3	4	5	6	7	8	9	℃	℉
Indication													
Alphabet	A	B	C	D	E	F	G	H	I	J	K	L	M
Indication													
Alphabet	N	O	P	Q	R	S	T	U	V	W	X	Y	Z

⚠ Caution

- This instrument should be used in accordance with the specifications described in the manual. If it is not used according to the specifications, it may malfunction or cause a fire.
- Be sure to follow all of the warnings, cautions and notices. If they are not observed, serious injury or malfunction may occur.
- The contents of this instruction manual are subject to change without notice.
- Care has been taken to ensure that the contents of this instruction manual are correct, but if there are any doubts, mistakes or questions, please inform our sales department.
- This instrument is designed to be installed through a control panel. If it is not, measures must be taken to ensure that the operator cannot touch power terminals or other high voltage sections.
- Any unauthorized transfer or copying of this document, in part or in whole, is prohibited.
- Shinko Technos Co., Ltd. is not liable for any damage or secondary damage(s) incurred as a result of using this product, including any indirect damage.

Safety Precautions (Be sure to read these precautions before using our products.)

The safety precautions are classified into 2 categories: “Warning” and “Caution”.
Depending on the circumstances, procedures indicated by ⚠ Caution may result in serious consequences, so be sure to follow the directions for usage.

⚠ Warning Procedures which may lead to dangerous conditions and cause death or serious injury, if not carried out properly.

⚠ Caution Procedures which may lead to dangerous conditions and cause superficial to medium injury or physical damage or may degrade or damage the product, if not carried out properly.

⚠ Warning

- To prevent an electrical shock or fire, only Shinko or other qualified service personnel may handle the inner assembly.
- To prevent an electrical shock, fire or damage to the instrument, parts replacement may only be undertaken by Shinko or other qualified service personnel.

⚠ SAFETY PRECAUTIONS

- To ensure safe and correct use, thoroughly read and understand this manual before using this instrument.
- This instrument is intended to be used for measuring equipment. Verify correct usage after purpose-of-use consultation with our agency or main office. (Never use this instrument for medical purposes with which human lives are involved.)
- External protection devices such as protective equipment against excessive temperature rise, etc. must be installed, as malfunction of this product could result in serious damage to the system or injury to personnel. Proper periodic maintenance is also required.
- This instrument must be used under the conditions and environment described in this manual. Shinko Technos Co., Ltd. does not accept liability for any injury, loss of life or damage occurring due to the instrument being used under conditions not otherwise stated in this manual.

⚠ Caution with Respect to Export Trade Control Ordinance

To avoid this instrument from being used as a component in, or as being utilized in the manufacture of weapons of mass destruction (i.e. military applications, military equipment, etc.), please investigate the end users and the final use of this instrument. In the case of resale, ensure that this instrument is not illegally exported.

1. Installation Precautions

⚠ Caution

This instrument is intended to be used under the following environmental conditions (IEC61010-1): Overvoltage category Ⅱ, Pollution degree 2

Ensure the mounting location corresponds to the following conditions:

- A minimum of dust, and an absence of corrosive gases
- No flammable, explosive gases
- No mechanical vibrations or shocks
- No exposure to direct sunlight, an ambient temperature of 0 to 50℃ (32 to 122℉) that does not change rapidly, and no icing
- An ambient non-condensing humidity of 35 to 85 %RH
- No large capacity electromagnetic switches or cables through which large current is flowing.
- No water, oil, chemicals or the vapors of these substances can come into direct contact with the unit.
- If the AER-102-SE is mounted through the face of a control panel, the ambient temperature of the unit – not the ambient temperature of the control panel – must be kept under 50℃. Otherwise the life of electronic parts (especially electrolytic capacitors) of the unit will be shortened.

Note: **Do not install this instrument on or near flammable material even though the case of this instrument is made of flame-resistant resin.**

2. Wiring Precautions

⚠ Caution

- Do not leave wire remnants in the instrument, as they could cause a fire or a malfunction.
- Use a solderless terminal with an insulation sleeve in which the M3 screw fits when wiring the AER-102-SE.
- The terminal block of this instrument is designed to be wired from the left side. The lead wire must be inserted from the left side of the terminal, and fastened with the terminal screw.
- Tighten the terminal screw using the specified torque. If excessive force is applied to the screw when tightening, the terminal screw may be damaged.
- This instrument does not have a built-in power switch, circuit breaker and fuse. It is necessary to install a power switch, circuit breaker and fuse near the instrument. (Recommended fuse: Time-lag fuse, rated voltage 250 V AC, rated current 2 A)
- For a 24 V AC/DC power source, do not confuse polarity when using direct current (DC).
- Be sure to connect the ground terminal to earth for safety (D-class grounding). Keep the grounding of this unit separate from other electrical devices, such as motors.
- Do not apply a commercial power source to the sensor which is connected to the input terminal nor allow the power source to come into contact with the sensor.
- Use the 2-electrode Resistivity Sensor in accordance with the sensor input specifications of the AER-102-SE.
- Keep the input wires and power lines separate.

Note about the 2-Electrode Resistivity Sensor Cable

The 2-electrode Resistivity Sensor cable is a highly-insulated (electrical) cable. Please handle it with utmost care as follows.

- Do not allow terminals and socket of the 2-electrode Resistivity Sensor cable to come in contact with moisture or oil of any kind. Likewise, ensure fingers are clean, otherwise the insulation will deteriorate, resulting in unstable indication.

  Be sure to keep the cable dry and clean at all times.

  If the cable is stained, clean it with alcohol, and dry it completely.
- For calibration or electrode checking/replacement, the 2-electrode Resistivity Sensor cable should be wired with sufficient length.
- Keep the 2-electrode Resistivity Sensor cable and junction cable away from electrical devices, such as motors or their power lines from which inductive interference emanates.

Connection

The 2-electrode Resistivity Sensor cable has the following terminals.

Code	Terminal
1	Resistivity Sensor terminal
2	Resistivity Sensor terminal
A, B (T, T)	Temperature compensation sensor terminals [Pt100 (2-wire type), Pt1000]
A, B, B	Temperature compensation sensor terminals [Pt100 (3-wire type)]
E	Shield wire terminal

For the 2-electrode Resistivity Sensor with No Temperature Compensation, A, B (T, T) or A, B, B cables are not available.

E cables are available depending on the sensor type.

3. Operation and Maintenance Precautions

⚠ Caution

- Do not touch live terminals. This may cause an electrical shock or problems in operation.
- Turn the power supply to the instrument OFF when retightening the terminal or cleaning.

  Working on or touching the terminal with the power switched ON may result in severe injury or death due to electrical shock.
- Use a soft, dry cloth when cleaning the instrument.

  (Alcohol based substances may tarnish or deface the unit.)
- As the display section is vulnerable, be careful not to put pressure on, scratch or strike it with a hard object.

Contents

Page

1. Model 8
   1.1 Model 8
   1.2 How to Read the Model Label 8
2. Names and Functions of Instrument 9
3. Mounting to the Control Panel 10
   3.1 Site Selection 10
   3.2 External Dimensions (Scale: mm) 10
   3.3 Panel Cutout (Scale: mm) 11
   3.4 Mounting and Removal 12
4. Wiring 13
   4.1 Lead Wire Solderless Terminal 14
   4.2 Terminal Arrangement 15
5. Outline of Key Operation and Setting Groups 16
   5.1 Outline of Key Operation 16
   5.2 Setting Groups 16
6. Key Operation Flowchart 18
7. Setup 21
   7.1 Turn the Power Supply to the AER-102-SE ON. 21
   7.2 Resistivity Input Group 22
   7.3 Temperature Input Group 25
   7.4 EVT1 Action Group 27
   7.5 EVT2 Action Group 35
   7.6 EVT3 Action Group 35
   7.7 EVT4 Action Group 35
   7.8 Basic Function Group 36
8. Calibration 42
   8.1 Resistivity Calibration Span Adjustment Mode 42
   8.2 Temperature Calibration Mode 43
   8.3 Transmission Output 1 Adjustment Mode 44
   8.4 Transmission Output 2 Adjustment Mode 45
9. Measurement 46
   9.1 Starting Measurement 46
   9.2 EVT1 to EVT4 Outputs 47
   9.3 Error Output 49
   9.4 Fail Output 49
   9.5 Resistivity Input Error Alarm 50
   9.6 Cycle Automatic Variable Function 51
   9.7 Error Code during Measurement 52
   9.8 Setting EVT1 to EVT4 Values 52
   9.9 Transmission Output 1 and 2 54
10. Specifications 55
   10.1 Standard specifications 55
   10.2 Optional Specifications 63

11. Troubleshooting 65
11.1 Indication 65
11.2 Key Operation 65
12. Temperature Compensation Method 66
12.1 How to Input Temperature Coefficient 66
12.2 Temperature Compensation Based on the Temperature Characteristics of Deionized Water 66
13. Character Tables 68
13.1 Setting Group List 68
13.2 Temperature Calibration Mode 68
13.3 Resistivity Calibration Span Adjustment 68
13.4 Transmission Output 1 Adjustment Mode 68
13.5 Transmission Output 2 Adjustment Mode 68
13.6 Simple Setting Mode 69
13.7 Resistivity Input Group 70
13.8 Temperature Input Group 71
13.9 EVT1 Action Group 72
13.10 EVT2 Action Group 75
13.11 EVT3 Action Group 78
13.12 EVT4 Action Group 81
13.13 Basic Function Group 84
13.14 Error Code List 87

1. Model

1.1 Model

AER-10	2-	SE		, □□□	
Input points	2				2 points
Input		SE			2-electrode Resistivity Sensor (Temperature element Pt100) (*1)
					2-electrode Resistivity Sensor (Temperature element Pt1000) (*1)
Power supply voltage					100 to 240 V AC (standard)
			1		24 V AC/DC (*2)
Option				C5	Serial communication RS-485
				EVT3	EVT3, EVT4 output (Contact output 3, 4)
				TA2	Transmission output 2 (*3)

(*1) This input temperature specification was specified at the time of ordering.
(*2) Power supply voltage 100 to 240 V AC is standard.
When ordering 24 V AC/DC, enter “1” in Power supply voltage, after ‘SE’.
(*3) If Transmission output 2 (TA2 option) is ordered, the EVT1 cannot be added.

1.2 How to Read the Model Label

The model label is attached to the left side of the case.

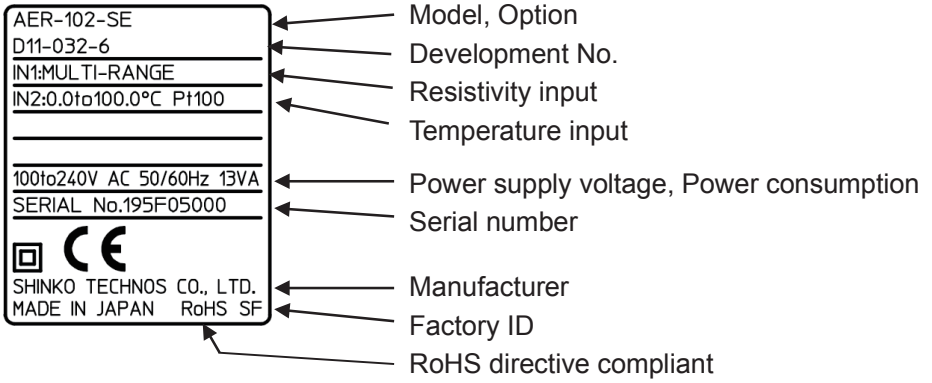

(Fig. 1.2-1)

2. Names and Functions of Instrument

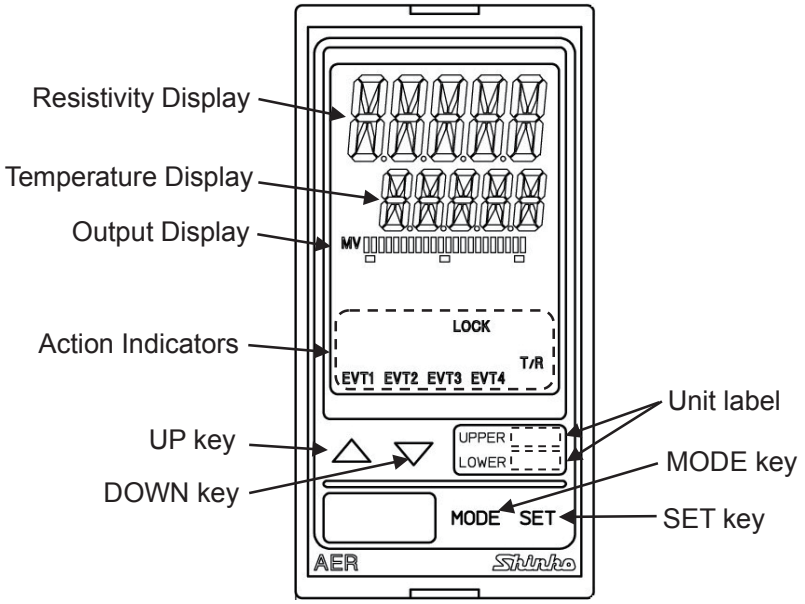

(Fig. 2-1)

Displays

Resistivity Display	Resistivity or characters in setting mode are indicated in red/green/orange. Indications differ depending on the selections in [Backlight selection (p.40)] and [Resistivity color (p.40)].
Temperature Display	Temperature or values in setting mode are indicated in green. Indications differ depending on the selections in [Backlight selection (p.40)].
Output Display	Backlight green The bar graph lights up corresponding to the transmission output. Indications differ depending on the selections in [Bar graph indication(p.40)].

Action Indicators: Backlight orange

EVT1	Lights up when EVT1 output (Contact output 1) is ON.
EVT2	Lights up when EVT2 output (Contact output 2) is ON.
EVT3	Lights up when EVT3 output (Contact output 3) (EVT3 option) is ON.
EVT4	Lights up when EVT4 output (Contact output 4) (EVT3 option) is ON.
T/R	Lights up during Serial communication (C5 option) TX output (transmitting).
LOCK	Lights up when Lock 1, 2 or 3 is selected.

Unit Label

UPPER	Attach the user's unit of Resistivity Display from the included unit labels if necessary.
LOWER	Attach the user's unit of Temperature Display from the included unit labels if necessary.

Keys

△	**UP key**	Increases the numeric value.
▽	**DOWN key**	Decreases the numeric value.
MODE	**MODE key**	Selects a group.
SET	**SET key**	Switches setting modes, and registers the set value.

3. Mounting to the Control Panel

3.1 Site Selection

⚠ Caution

Use within the following temperature and humidity ranges:
Temperature: 0 to 50℃ (32 to 122℉) (No icing)
Humidity: 35 to 85 %RH (Non-condensing)
If AER-102-SE is mounted through the face of a control panel, the ambient temperature of the unit – not the ambient temperature of the control panel – must be kept under 50℃, otherwise the life of electronic parts (especially electrolytic capacitors) of the unit will be shortened.

This instrument is intended to be used under the following environmental conditions (IEC61010-1): Overvoltage category Ⅱ, Pollution degree 2

Ensure the mounting location corresponds to the following conditions:

- A minimum of dust, and an absence of corrosive gases
- No flammable, explosive gases
- No mechanical vibrations or shocks
- No exposure to direct sunlight, an ambient temperature of 0 to 50℃ (32 to 122℉) that does not change rapidly
- An ambient non-condensing humidity of 35 to 85 %RH
- No large capacity electromagnetic switches or cables through which large current is flowing.
- No water, oil, chemicals or the vapors of these substances can come into direct contact with the unit.

3.2 External Dimensions (Scale: mm)

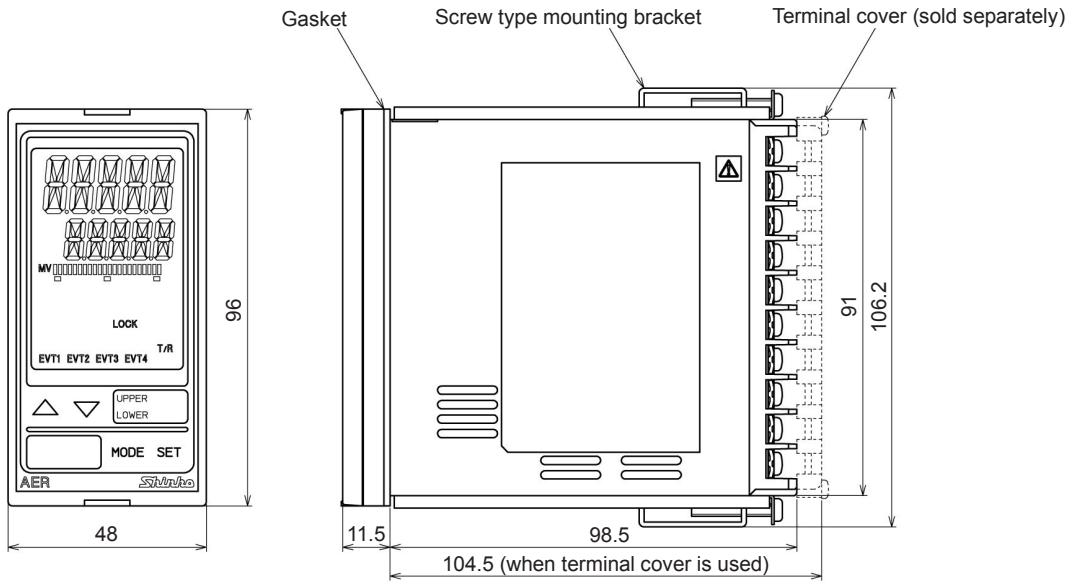

(Fig. 3.2-1)

3.3 Panel Cutout (Scale: mm)

⚠ Caution

If horizontal close mounting is used for the unit, IP66 specification Drip-proof/ Dust-proof) may be compromised, and all warranties will be invalidated.

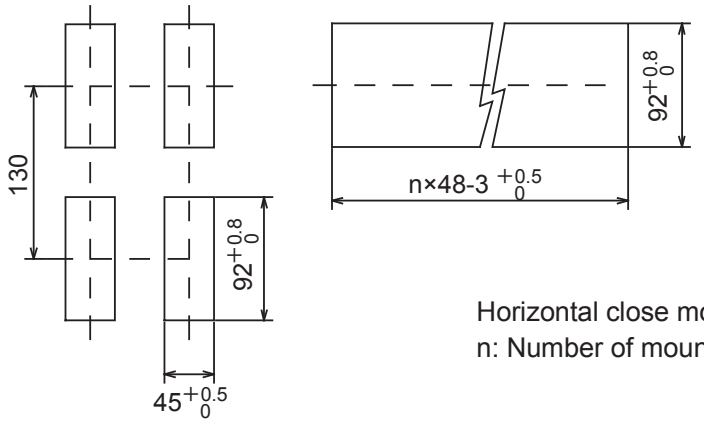

Horizontal close mounting
n: Number of mounted units

(Fig. 3.3-1)

3.4 Mounting and Removal

⚠ Caution

As the case is made of resin, do not use excessive force while screwing in the mounting bracket, or the case or mounting brackets could be damaged. The tightening torque should be 0.12 N•m.

How to mount the unit

Mount the unit vertically to the flat, rigid panel to ensure it adheres to the Drip-proof/ Dust-proof specification (IP66).

Mountable panel thickness: 1 to 8 mm

(1) Insert the unit from the front side of the panel.

(2) Attach the mounting brackets by the holes at the top and bottom of the case, and secure the unit in place with the screws.

How to remove the unit

(1) Turn the power to the unit OFF, and disconnect all wires before removing the unit.

(2) Loosen the screws of the mounting brackets, and remove the mounting brackets.

(3) Pull the unit out from the front of the panel.

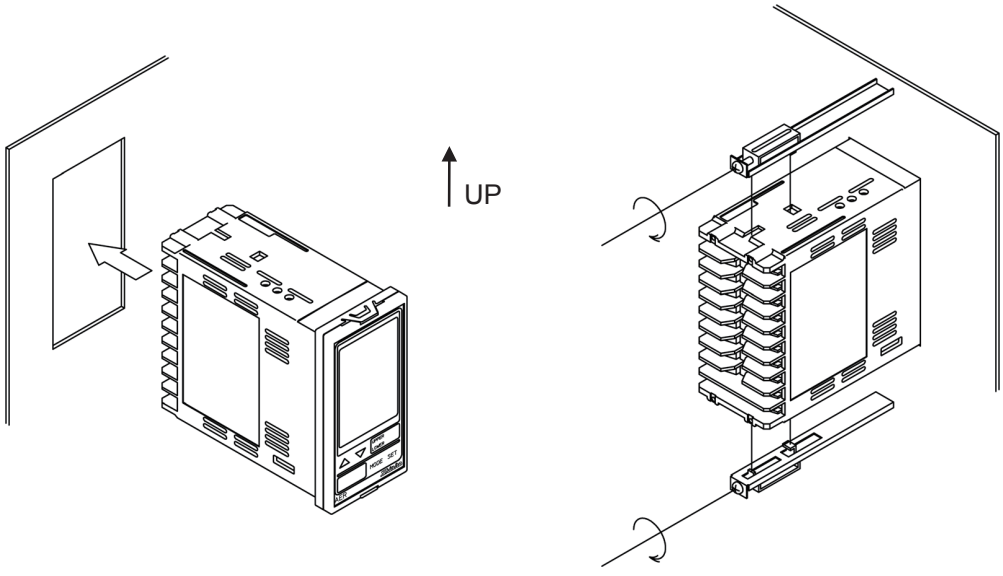

(Fig. 3.4-1)

4. Wiring

⚠ Warning

Turn the power supply to the instrument off before wiring or checking. Working on or touching the terminal with the power switched on may result in severe injury or death due to electrical shock.

⚠ Caution

- Do not leave wire remnants in the instrument, as they could cause a fire or a malfunction.
- Use a solderless terminal with an insulation sleeve in which the M3 screw fits when wiring the AER-102-SE.
- The terminal block of this instrument is designed to be wired from the left side. The lead wire must be inserted from the left side of the terminal, and fastened with the terminal screw.
- Tighten the terminal screw using the specified torque. If excessive force is applied to the screw when tightening, the terminal screw may be damaged.
- This instrument does not have a built-in power switch, circuit breaker and fuse. It is necessary to install a power switch, circuit breaker and fuse near the instrument. (Recommended fuse: Time-lag fuse, rated voltage 250 V AC, rated current 2 A)
- For a 24 V AC/DC power source, do not confuse polarity when using direct current (DC).
- Be sure to connect the ground terminal to earth for safety (D-class grounding). Keep the grounding of this unit separate from other electrical devices, such as motors.
- Do not apply a commercial power source to the sensor which is connected to the input terminal nor allow the power source to come into contact with the sensor.
- Use the 2-electrode Resistivity Sensor in accordance with the sensor input specifications of this unit.
- Keep the input wires and power lines separate.

Note about the 2-Electrode Resistivity Sensor Cable

The 2-electrode Resistivity Sensor cable is a highly-insulated (electrical) cable.
Please handle it with utmost care as follows.

- Do not allow terminals and socket of the 2-electrode Resistivity Sensor cable to come in contact with moisture or oil of any kind. Likewise, ensure fingers are clean, otherwise the insulation will deteriorate, resulting in unstable indication.

Be sure to keep the cable dry and clean at all times.
If the cable is stained, clean it with alcohol, and dry it completely.

- For calibration or electrode checking/replacement, the 2-electrode Resistivity Sensor cable should be wired with sufficient length.
- Keep the 2-electrode Resistivity Sensor cable and junction cable away from electrical devices, such as motors or their power lines from which inductive interference emanates.

Connection

The 2-electrode Resistivity Sensor cable has the following terminals.

Code	Terminal
1	Resistivity Sensor terminal
2	Resistivity Sensor terminal
A, B (T, T)	Temperature compensation sensor terminals [Pt100 (2-wire type), Pt1000]
A, B, B	Temperature compensation sensor terminals [Pt100 (3-wire type)]
E	Shield wire terminal

For the 2-electrode Resistivity Sensor with No Temperature Compensation, A, B (T, T) or A, B, B cables are not available.
E cables are available depending on the sensor type.

4.1 Lead Wire Solderless Terminal

Use a solderless terminal with an insulation sleeve in which an M3 screw fits as follows.
The tightening torque should be 0.63 N•m.

Solderless Terminal	Manufacturer	Model	Tightening Torque
Y-type	Nichifu Terminal Industries CO.,LTD.	TMEV1.25Y-3	0.63 N•m
	Japan Solderless Terminal MFG CO.,LTD.	VD1.25-B3A	
Ring-type	Nichifu Terminal Industries CO.,LTD.	TMEV1.25-3	
	Japan Solderless Terminal MFG CO.,LTD.	V1.25-3	

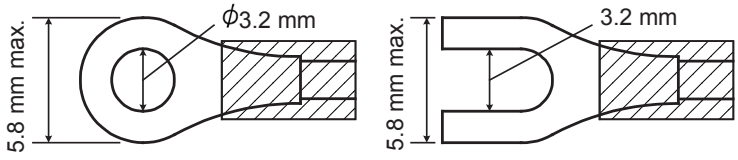

(Fig. 4.1-1)

4.2 Terminal Arrangement

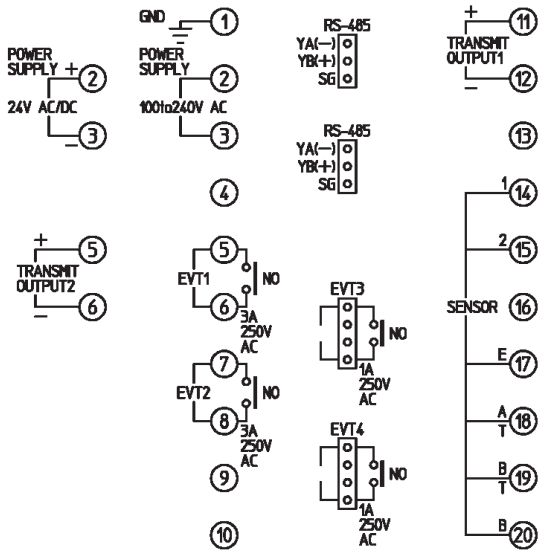

(Fig. 4.2-1)

GND	Ground
POWER SUPPLY	100 to 240 V AC or 24 V AC/DC (when 1 is added after ‘SE”.) **For 24 V DC, ensure polarity is correct.**
EVT1	EVT1 output (Contact output 1)
EVT2	EVT2 output (Contact output 2)
TRANSMIT OUTPUT1	Transmission output 1
TRANSMIT OUTPUT2	Transmission output 2 (TA2 option)
1, 2	Resistivity Sensor terminals 1, 2
E	Resistivity Sensor shield terminal
A, B (T, T)	Temperature compensation sensor terminals [Pt100 (2-wire), Pt1000]
A, B, B	Temperature compensation sensor terminals [Pt100 (3-wire)]
RS-485	Serial communication (C5 option) 2 connectors are wired internally. Use the included wire harnesses C5J and C0J.
EVT3	EVT3 output (Contact output 3) (EVT3 option) Use the included wire harness HBJ.
EVT4	EVT4 output (Contact output 4) (EVT3 option) Use the included wire harness HBJ.

5. Outline of Key Operation and Setting Groups

5.1 Outline of Key Operation

There are 2 setting modes: Simple Setting Mode, and Group Selection Mode in which setting items are divided into groups.

To enter Simple Setting mode, press the SET key in Resistivity/Temperature Display Mode.

To enter Group Selection mode, press the MODE key in Resistivity/Temperature Display Mode.

Select a group with the MODE key, and press the SET key. The unit enters each setting item.

To set each setting item, use the △ or ▽, and register the set value with the SET key.

5.2 Setting Groups

Setting groups are described in the next page.

[About Resistivity/Temperature Display Mode and Temperature Calibration Mode]

(*1) In Resistivity/Temperature Display Mode, measurement starts, indicating the item selected in [Backlight selection (p.40)] in the Basic Function Group.

(*2) If oFF (No temperature compensation) is selected in [Temperature compensation method (p.25)] in the Temperature Input Group, and if oFF (Unlit) or 5Td (Reference temperature) is selected in [Temperature Display when no temperature compensation (p.41)] in the Basic Function Group, the unit will not enter Temperature calibration mode.

(*3) Available when the EVT3, EVT4 outputs (EVT3 option) is ordered.

(*4) Available when Transmission output 2 (TA2 option) is ordered.

(*5) Not available if Transmission output 2 (TA2 option) is ordered.

[Key Operation]

- △ + MODE (3 sec): Press and hold the △ key and MODE key (in that order) together for approx. 3 seconds. The unit will proceed to Temperature Calibration Mode.
- ▽ + MODE (3 sec): Press and hold the ▽ key and MODE key (in that order) together for approx. 3 seconds. The unit will proceed to Resistivity Calibration Span Adjustment Mode.
- △ + SET (3 sec): Press the △ and SET key (in that order) together for approx. 3 seconds. The unit will proceed to Transmission output 1 Zero Adjustment Mode.
- ▽ + SET (3 sec): Press the ▽ and SET key (in that order) together for approx. 3 seconds. The unit will proceed to Transmission output 2 Zero Adjustment Mode.
- MODE or SET: Press the MODE or SET key. The unit will proceed to the next setting item, illustrated by an arrow.
- SET or MODE: Press the SET or MODE key until the desired setting mode appears.
- To revert to Resistivity/Temperature Display Mode, press and hold the MODE key for approx. 3 seconds while in any mode.

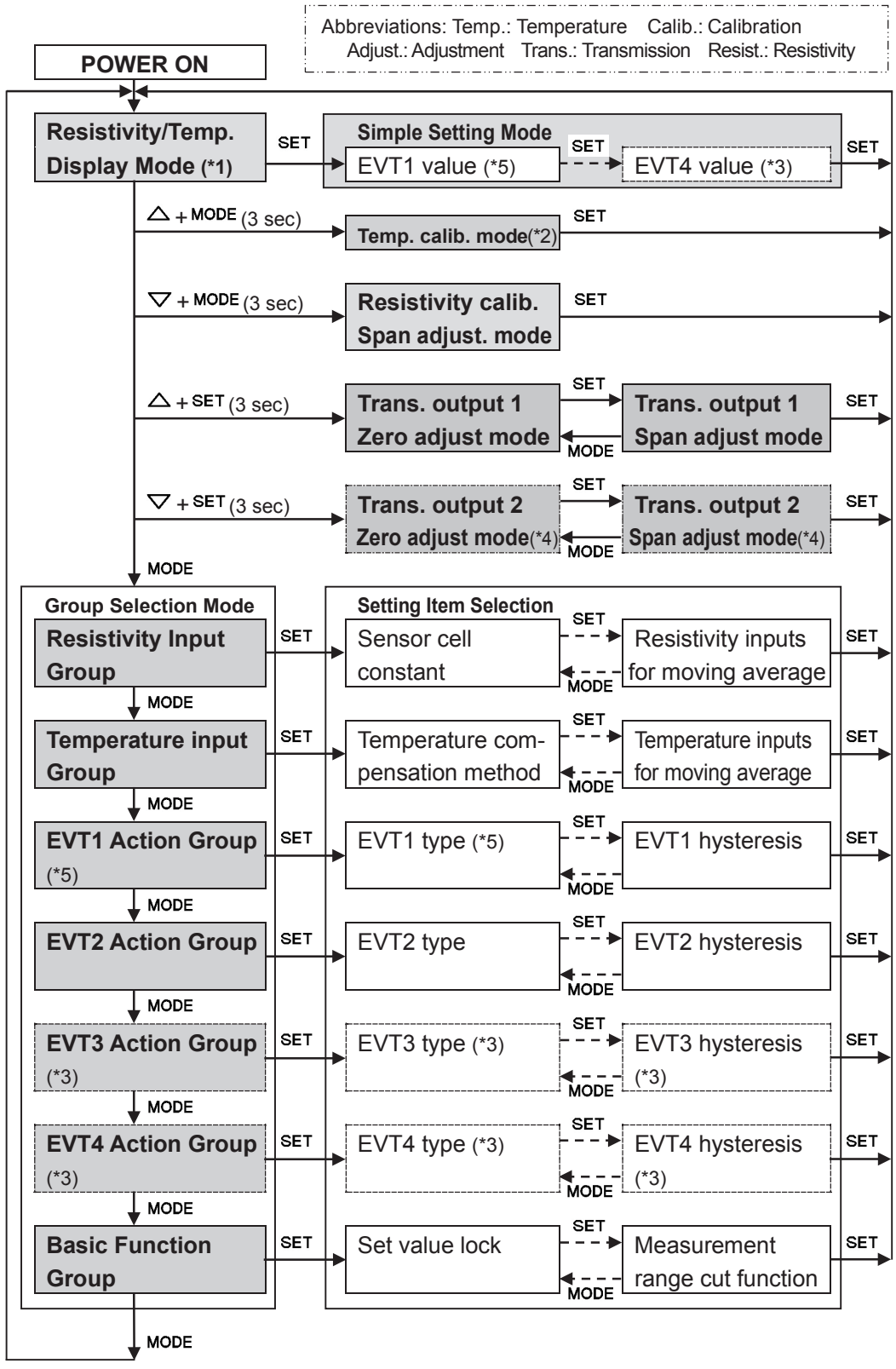
Abbreviations: Temp.: Temperature Calib.: Calibration
Adjust.: Adjustment Trans.: Transmission Resist.: Resistivity
POWER ON
Resistivity/Temp. Display Mode (*1)
SET
Simple Setting Mode
EVT1 value (*5)
SET
EVT4 value (*3)
SET
△ + MODE (3 sec)
Temp. calib. mode(*2)
SET
▽ + MODE (3 sec)
Resistivity calib. Span adjust. mode
SET
△ + SET (3 sec)
Trans. output 1 Zero adjust mode
SET
MODE
Trans. output 1 Span adjust mode
SET
▽ + SET (3 sec)
Trans. output 2 Zero adjust mode(*4)
SET
MODE
Trans. output 2 Span adjust mode(*4)
SET
MODE
Group Selection Mode
Setting Item Selection
Resistivity Input Group
SET
Sensor cell constant
SET
MODE
Resistivity inputs for moving average
SET
MODE
Temperature input Group
SET
Temperature com-pensation method
SET
MODE
Temperature inputs for moving average
SET
MODE
EVT1 Action Group (*5)
SET
EVT1 type (*5)
SET
MODE
EVT1 hysteresis
SET
MODE
EVT2 Action Group
SET
EVT2 type
SET
MODE
EVT2 hysteresis
SET
MODE
EVT3 Action Group (*3)
SET
EVT3 type (*3)
SET
MODE
EVT3 hysteresis (*3)
SET
MODE
EVT4 Action Group (*3)
SET
EVT4 type (*3)
SET
MODE
EVT4 hysteresis (*3)
SET
MODE
Basic Function Group
SET
Set value lock
SET
MODE
Measurement range cut function
SET
MODE

6. Key Operation Flowchart

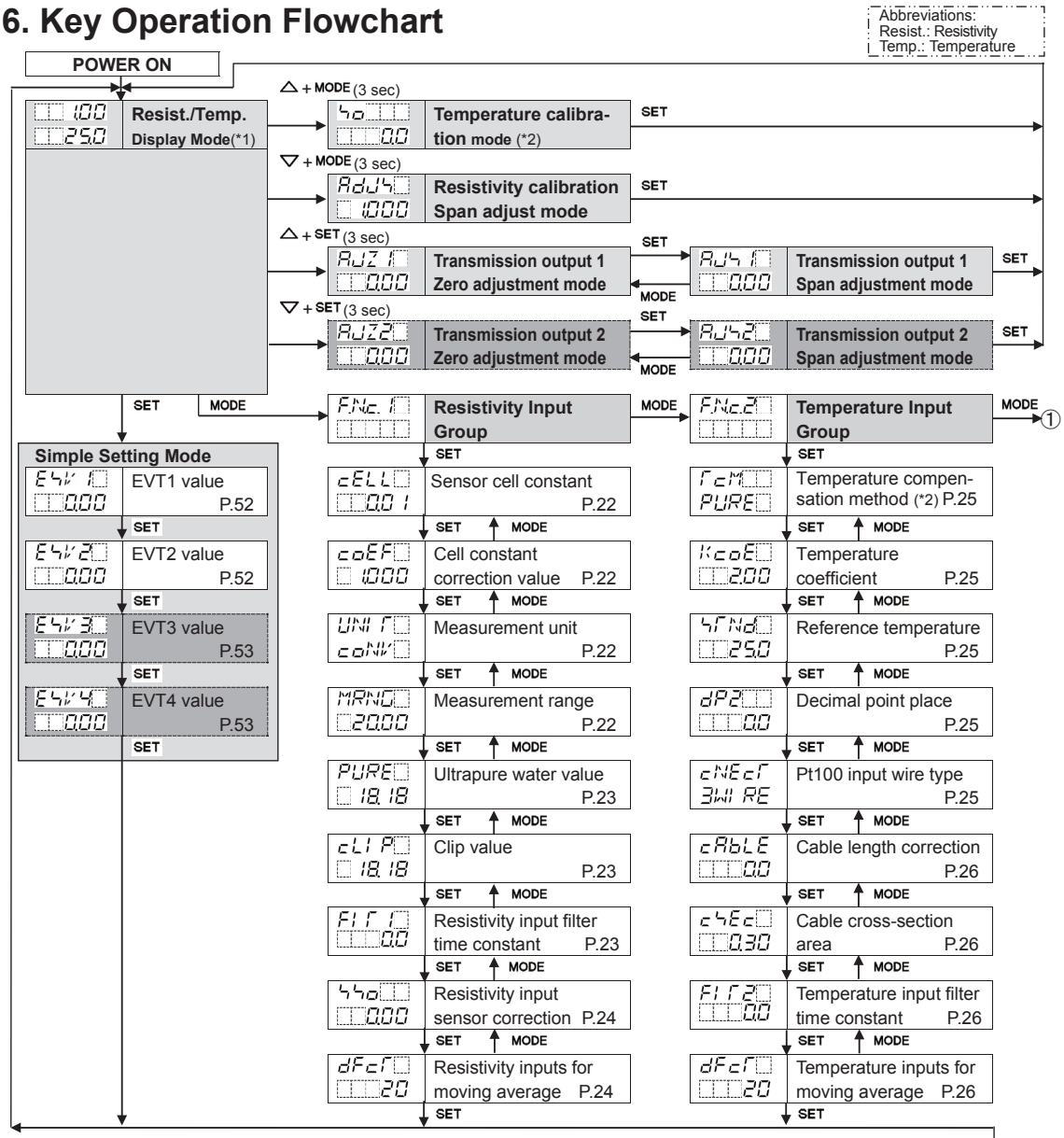

[About Setting Items]

EVT1 value P.52

- **Upper left**: Resistivity Display: Indicates the setting item characters.
- **Lower left**: Temperature Display: Indicates the factory default.
- **Right side**: Indicates the setting item and reference page.

EVT3 value P.53

Setting items in shaded section will be displayed only when the corresponding option is ordered.

[About Each Mode and Setting Items]

(*1) Measurement starts, indicating the item selected in [Backlight selection (p.40)] in the Basic Function Group.

(*2) If oFF (No temperature compensation) is selected in [Temperature compensation method (p.25)] in the Temperature Input Group, and if oFF (Unlit) or rd (Reference temperature) is selected in [Temperature Display when no temperature compensation (P.41)] in the Basic Function Group, the unit does not move to Temperature Calibration Mode.

[About Key Operation]

- △ + MODE (3 sec): Press and hold the △ and MODE keys (in that order) together for approx. 3 seconds. The unit enters the next mode.
- ▽ + MODE (3 sec): Press and hold the ▽ and MODE keys (in that order) together for approx. 3 seconds. The unit enters the next mode.
- △ + SET (3 sec): Press and hold the △ and SET keys (in that order) together for approx. 3 seconds. The unit enters the next mode.
- ▽ + SET (3 sec): Press and hold the ▽ and SET keys (in that order) together for approx. 3 seconds. The unit enters the next mode.
- SET, MODE: Press the SET or MODE key. The unit will proceed to the next setting item, illustrated by an arrow.
- To revert to Resistivity/Temperature Display Mode, press and hold the MODE key for 3 seconds while in any mode.

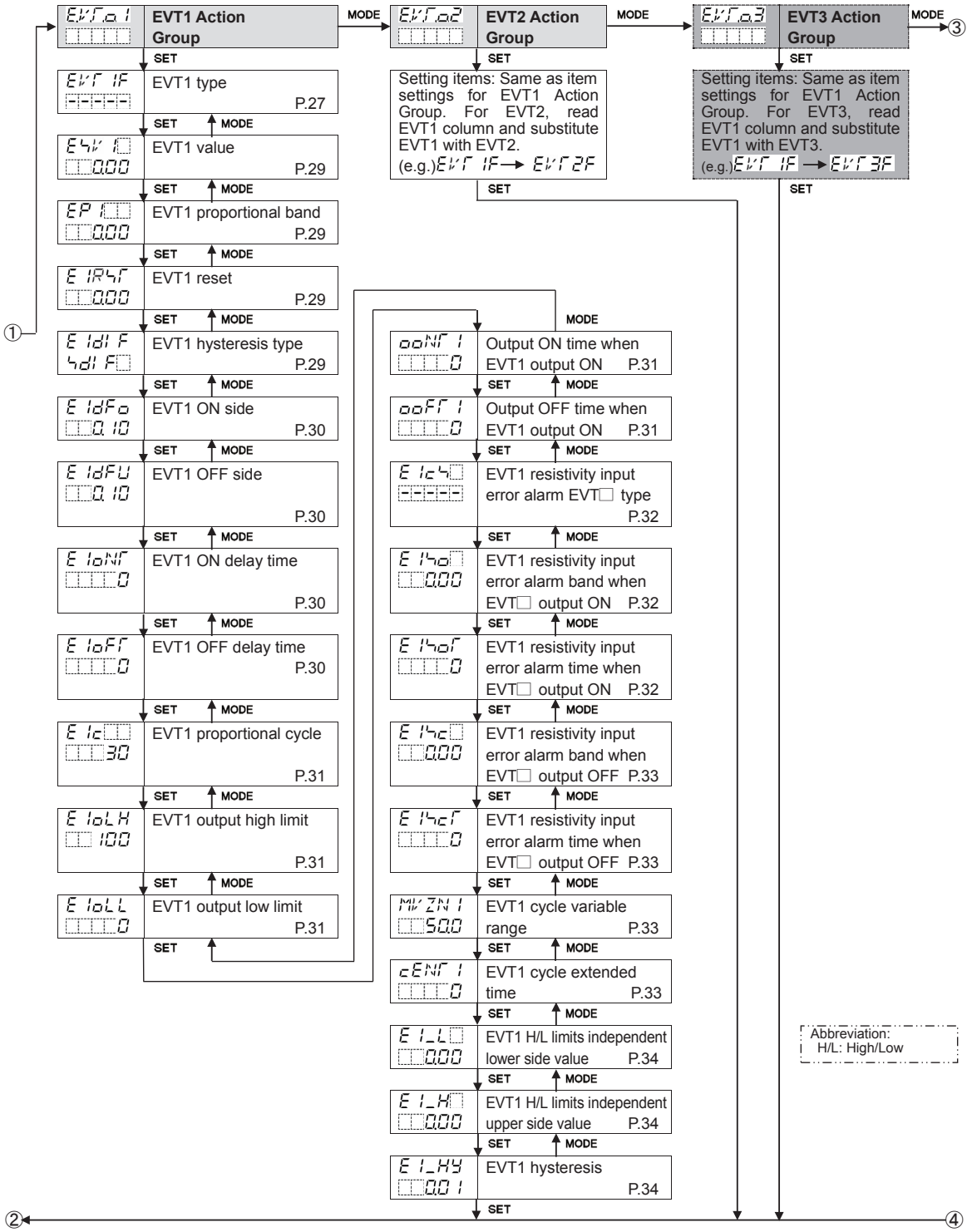
EVT.o1
EVT1 Action Group
MODE
EVT.o2
EVT2 Action Group
MODE
EVT.o3
EVT3 Action Group
MODE
③
SET
EVT 1F
EVT1 type
P.27
SET
MODE
E1V 1□
0.00
EVT1 value
P.29
EP 1□□
0.00
EVT1 proportional band
P.29
E 1RST
0.00
EVT1 reset
P.29
E 1dl F
1dl F□
EVT1 hysteresis type
P.29
E 1dFo
0.10
EVT1 ON side
P.30
E 1dFU
0.10
EVT1 OFF side
P.30
E 1oNT
0
EVT1 ON delay time
P.30
E 1oFT
0
EVT1 OFF delay time
P.30
E 1c□□
30
EVT1 proportional cycle
P.31
E 1oLH
100
EVT1 output high limit
P.31
E 1oLL
0
EVT1 output low limit
P.31
Setting items: Same as item settings for EVT1 Action Group. For EVT2, read EVT1 column and substitute EVT1 with EVT2.
(e.g.)EVT 1F → EVT2F
Setting items: Same as item settings for EVT1 Action Group. For EVT3, read EVT1 column and substitute EVT1 with EVT3.
(e.g.)EVT 1F → EVT3F
①
②
④
ooNT 1
0
Output ON time when EVT1 output ON P.31
ooFT 1
0
Output OFF time when EVT1 output ON P.31
E 1c1□
E 1H□
0.00
EVT1 resistivity input error alarm band when EVT□ output ON P.32
E 1HoT
0
EVT1 resistivity input error alarm time when EVT□ output ON P.32
E 1Hc□
0.00
EVT1 resistivity input error alarm band when EVT□ output OFF P.33
E 1HcT
0
EVT1 resistivity input error alarm time when EVT□ output OFF P.33
MVZN 1
50.0
EVT1 cycle variable range P.33
cENT 1
0
EVT1 cycle extended time P.33
E 1_L□
0.00
EVT1 H/L limits independent lower side value P.34
E 1_H□
0.00
EVT1 H/L limits independent upper side value P.34
E 1_HY
0.01
EVT1 hysteresis P.34
Abbreviation:
H/L: High/Low

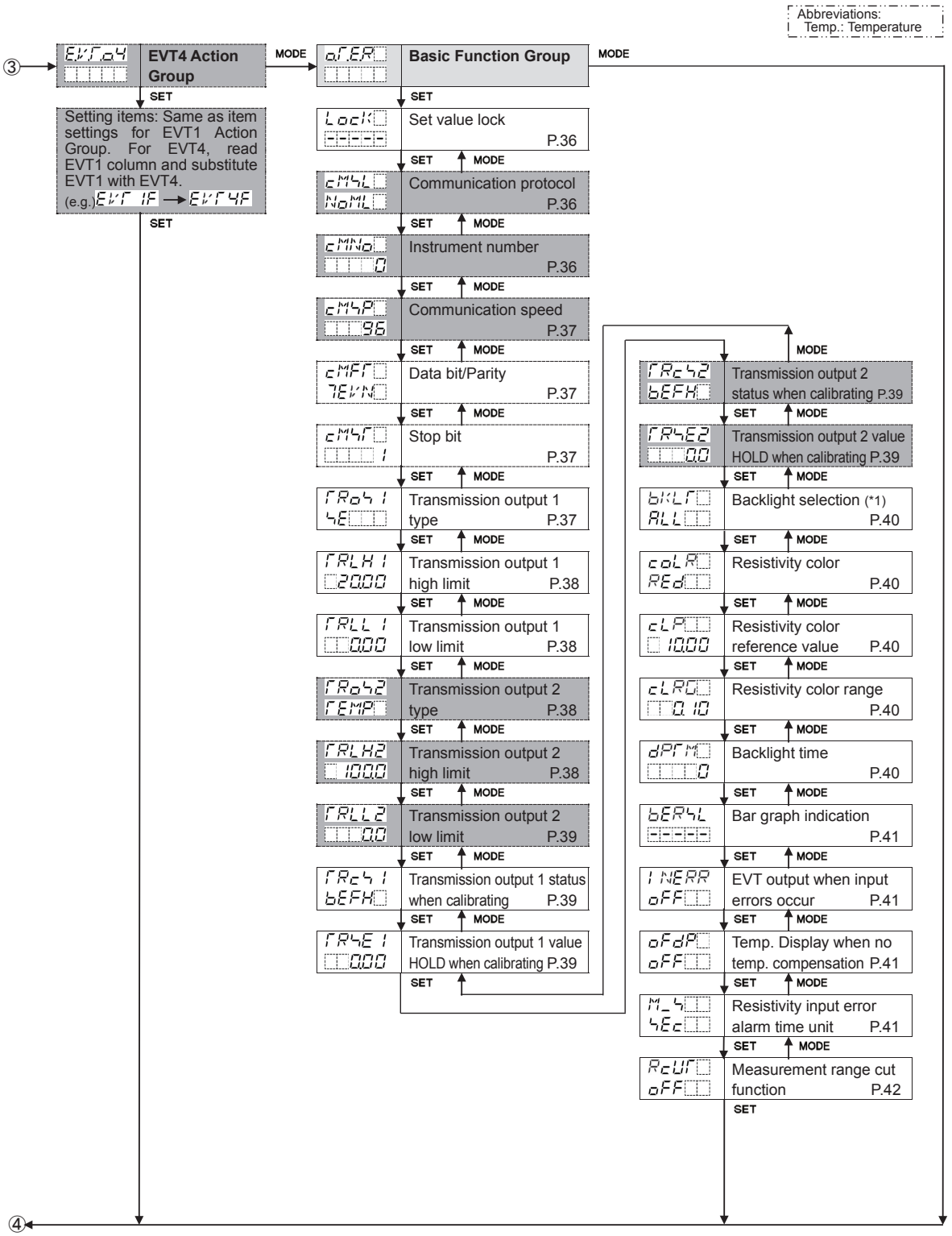
Abbreviations:
Temp.: Temperature
③
EVT.04
EVT4 Action Group
MODE
oTER
Basic Function Group
MODE
SET
Setting items: Same as item settings for EVT1 Action Group. For EVT4, read EVT1 column and substitute EVT1 with EVT4.
(e.g.) EVT 1F → EVT 4F
SET
LocK
Set value lock
P.36
SET
MODE
cMSL
NoML
Communication protocol
P.36
cMNo
0
Instrument number
P.36
cMSP
9600
Communication speed
P.37
cMFT
7EVN
Data bit/Parity
P.37
cMST
1
Stop bit
P.37
TRo1
SE
Transmission output 1 type
P.37
TRLH1
20.00
Transmission output 1 high limit
P.38
TRLL1
0.00
Transmission output 1 low limit
P.38
TRo2
TEMP
Transmission output 2 type
P.38
TRLH2
100.0
Transmission output 2 high limit
P.38
TRLL2
0.0
Transmission output 2 low limit
P.39
TRC1
bEFH
Transmission output 1 status when calibrating
P.39
TRSE1
0.00
Transmission output 1 value HOLD when calibrating
P.39
TRC2
bEFH
Transmission output 2 status when calibrating
P.39
TRSE2
0.0
Transmission output 2 value HOLD when calibrating
P.39
bKLT
ALL
Backlight selection (*1)
P.40
coLR
RED
Resistivity color
P.40
cLP
10.00
Resistivity color reference value
P.40
cLRG
0.10
Resistivity color range
P.40
dPTM
0
Backlight time
P.40
bERL
Bar graph indication
P.41
INERR
oFF
EVT output when input errors occur
P.41
oFdP
oFF
Temp. Display when no temp. compensation
P.41
M_S
SEc
Resistivity input error alarm time unit
P.41
RGUT
oFF
Measurement range cut function
P.42
④

7. Setup

Setup should be done before using this instrument according to the user's conditions:
Setting the Resistivity input, Temperature input, EVT1, EVT2, EVT3 (EVT3 option) and EVT4 (EVT3 option) types, Serial communication (C5 option), Transmission output 1, Transmission output 2 (TA2 option), and Indication settings (Backlight selection, Resistivity color, etc.)

Setup can be conducted in the Resistivity Input Group, Temperature Input Group, EVT1, EVT2, EVT3, EVT4 Action Groups and Basic Function Group.
If the user's specification is the same as the factory default of the AER-102-SE, or if setup has already been complete, it is not necessary to set up the instrument. Proceed to Section "8. Calibration (p.42)".

7.1 Turn the Power Supply to the AER-102-SE ON.

For approx. 4 seconds after the power is switched ON, the following characters are indicated on the Resistivity Display and Temperature Display.

Display	Character	Measurement Unit	
Resistivity Display	conV	Resistivity (MΩ•cm)	
	kI	Resistivity (kΩ•m)	
Display	**Character**	**Input Temperature Spec.** (*)	**[Pt100 input wire type] Setting Item (p.25)**
Temperature Display	Pt 2	Pt100	2WI RE: 2-wire type
	Pt 3		3WI RE: 3-wire type
	Pt 10	Pt1000	

(*) This input temperature specification was specified at the time of ordering.

During this time, all outputs are in OFF status, and action indicators are turned off. After that, measurement starts, indicating the item selected in [Backlight selection (p.40)].
This status is called Resistivity/Temperature Display Mode.

7.2 Resistivity Input Group

To enter the Resistivity Input Group, follow the procedure below.

① F.Nc. 1 Press the MODE key in Resistivity/Temperature Display Mode.

② cELL Press the SET key.

The unit proceeds to the Resistivity Input Group, and “Sensor cell constant” will appear.

Character	Setting Item, Function, Setting Range	Factory Default
cELL 0.01	**Sensor cell constant** • Selects sensor cell constant. 0.01/cm fixed.	0.01/cm
coEF 1.000	**Cell constant correction value** • Sets sensor cell constant correction value. coEF and resistivity value are displayed alternately. • Setting range: 0.001 to 5.000	1.000
UNIT coNV	**Measurement unit** • Selects the resistivity measurement unit. **If resistivity unit is changed, Resistivity Span adjustment value will be cleared. Calibrate the Resistivity Span adjustment value again.** • coNV : Resistivity (MΩ•cm) hI : Resistivity (kΩ•m)	Resistivity (MΩ•cm)
MRNG 20.00	**Measurement range** • Selects resistivity measurement range. **If measurement range is changed, Resistivity Span adjustment value will be cleared. Calibrate the Resistivity Span adjustment value again.** • Selection items differ depending on the Measurement unit.	20.00 MΩ•cm

Measurement Unit	Selection Item	Measurement Range
Resistivity (MΩ•cm)	0.200	0.000 to 0.200 MΩ•cm
	2.00	0.00 to 2.00 MΩ•cm
	20.00	0.00 to 20.00 MΩ•cm
	100.0	0.0 to 100.0 MΩ•cm
Resistivity (kΩ•m)	2.00	0.00 to 2.00 k•m
	20.0	0.0 to 20.0 kΩ•m
	200.0	0.0 to 200.0 kΩ•m
	1000	0 to 1000 kΩ•m

<table>
<tr><th>Character</th><th>Setting Item, Function, Setting Range</th><th>Factory Default</th></tr>
<tr><td>PURE□
□ 18.18</td><td>Ultrapure water value
• Selects ultrapure water value.
• Selection items differ depending on the Measurement unit.
<table>
<tr><th>Measurement Unit</th><th>Selection Item</th><th>Ultrapure Water Value</th></tr>
<tr><td rowspan="3">Resistivity (MΩ•cm)</td><td>□ 18.18</td><td>18.18</td></tr>
<tr><td>□ 18.23</td><td>18.23</td></tr>
<tr><td>□ 18.24</td><td>18.24</td></tr>
<tr><td rowspan="3">Resistivity (kΩ•m)</td><td>□ 181.8</td><td>181.8</td></tr>
<tr><td>□ 182.3</td><td>182.3</td></tr>
<tr><td>□ 182.4</td><td>182.4</td></tr>
</table></td><td>18.18</td></tr>
<tr><td>CLIP□
□ 18.18</td><td>Clip value
• Sets the clip value (temporary resistivity to be fixed).
If resistivity measured value is larger than clip value and smaller than measurement range high limit value, Transmission output will be fixed at the clip value.
For the resistivity indication and Transmission output, see Section 10.1 Attached Functions “Larger than Clip Value, Smaller than Measurement Range High Limit”. (p.59)
• If any item except PURE□ is selected in [Temperature compensation method] (p.25):
If resistivity measured value exceeds measurement range high limit value, the clip value will be voided.
If PURE□ is selected in [Temperature compensation method] (p.25):
If resistivity measured value exceeds the selected ultrapure water value, the clip value will be voided.
• Setting range:
If any item except PURE□ is selected in [Temperature compensation method] (p.25):
0.00 to Measurement range high limit value (*)
If PURE□ is selected in [Temperature compensation method] (p.25):
0.00 to Selected ultrapure water value (*)</td><td>18.18 MΩ•cm</td></tr>
<tr><td>FIT1□
□□□0.0</td><td>Resistivity input filter time constant
• Sets Resistivity input filter time constant.
If the value is set too large, it affects EVT action due to the delay of response. Refer to ‘Resistivity (Temperature) Filter Time Constant’. (p.26)
• Setting range: 0.0 to 10.0 seconds</td><td>0.0 seconds</td></tr>
</table>

(*) The unit and decimal point place follow the measurement range.

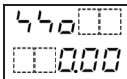	**Resistivity input sensor correction**	0.00 MΩ•cm
	• Sets resistivity input sensor correction value. This corrects the input value from the resistivity sensor. When a sensor cannot be set at the exact location where measurement is desired, sensor-measured resistivity may deviate from the resistivity in the measured location. In this case, desired resistivity can be obtained by adding a sensor correction value. However, it is effective within the measurement range regardless of the sensor correction value. Resistivity after sensor correction= Current resistivity + (Sensor correction value) • Setting range: ±10% of measurement span (*)	
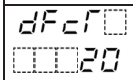	**Resistivity inputs for moving average**	20
	• Set the number of resistivity inputs used to obtain moving average. An average resistivity input value is calculated using the selected number of resistivity inputs. The resistivity input value is replaced every input sampling period. However, the resistivity input moving average function is disabled in Resistivity calibration mode or in Temperature calibration mode. • Setting range: 1 to 120	

(*) The unit and decimal point place follow the measurement range.

7.3 Temperature Input Group

To enter the Temperature Input Group, follow the procedure below.

① F.Nc.2 Press the MODE key twice in Resistivity/Temperature Display Mode.

② TcM Press the SET key.

The unit enters the Temperature Input Group, and "Temperature compensation method" will appear.

Character	Setting Item, Function, Setting Range	Factory Default
TcM PURE	**Temperature compensation method** • Selects temperature compensation calculation method. • PURE: Temperature compensation is conducted using temperature characteristics of deionized water. PUSTD: Temperature compensation is conducted using temperature characteristics of deionized water and impure substance. TcoE: Temperature compensation is conducted using temperature coefficient (%/℃) and randomly selected reference temperature. oFF: No temperature compensation	Temperature characteristics of deionized water
KcoE 2.00	**Temperature coefficient** • Sets temperature coefficient. If temperature coefficient is set to 2.00 %/℃, this value can be used for most aqueous solutions. If temperature coefficient of an aqueous solution is known, set the value. If temperature coefficient is set to 0.00 %/℃, resistivity without temperature compensation will be indicated. • Not available if PURE or oFF is selected in [Temperature compensation method]. • Setting range: -5.00 to 5.00 %/℃	2.00 %/℃
STNd 25.0	**Reference temperature** • Sets the reference temperature for temperature compensation. • Setting range: 5.0 to 95.0℃	25.0℃
dP2 0.0	**Decimal point place** • Selects decimal point place to be indicated on the Temperature Display. • 0 : No decimal point 0.0 : 1 digit after decimal point	1 digit after decimal point
cNEcT 3WIRE	**Pt100 input wire type** • Selects the input wire type of Pt100. • Not available for the 2-electrode Resistivity Sensor (Temperature element Pt1000). • 2WIRE: 2-wire type 3WIRE: 3-wire type	3-wire type

Character	Setting Item, Function, Setting Range	Factory Default
cAbLE □□□0.0	**Cable length correction** • Sets the cable length correction value. • Not available for the 2-electrode Resistivity Sensor (Temperature element Pt1000). Available only when 2WI RE (2-wire type) is selected in [Pt100 input wire type]. • Setting range: 0.0 to 100.0 m	0.0 m
cSEc□ □□0.30	**Cable cross-section area** • Sets the cable cross-section area. • Not available for the 2-electrode Resistivity Sensor (Temperature element Pt1000). Available only when 2WI RE (2-wire type) is selected in [Pt100 input wire type]. • Setting range: 0.10 to 2.00 mm^2	0.30 mm^2
FIT2□ □□□0.0	**Temperature input filter time constant** • Sets Temperature input filter time constant. If the value is set too large, it affects EVT action due to the delay of response. Refer to 'Resistivity (Temperature) Filter Time Constant'. (p.26) • Setting range: 0.0 to 10.0 seconds	0.0 seconds
dFcT□ □□□20	**Temperature inputs for moving average** • Sets the number of temperature inputs used to obtain moving average. An average temperature input value is calculated using the selected number of temperature inputs. The temperature input value is replaced every input sampling period. However, the temperature input moving average function is disabled in temperature calibration mode. • Setting range: 1 to 120	20

• Resistivity (Temperature) Filter Time Constant

Even when resistivity (temperature) measured value before filter process changes as shown in (Fig. 7.3-1), if the filter time constant "T" is set, the resistivity (temperature) measured value changes as shown in (Fig. 7.3-2) so that resistivity (temperature) measured value after finishing filter process can reach 63% (of the desired value) after T seconds have passed. If the filter time constant is set too large, it affects EVT action due to the delay of response.

(e.g.) In case the LSD (least significant digit) of the resistivity (temperature) measured value prior to filter process is fluctuating, it can be suppressed by using the filter time constant.

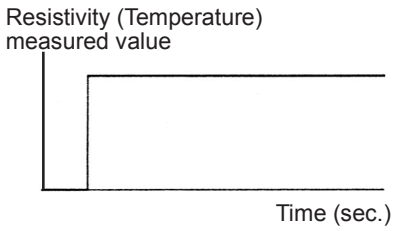

(Fig. 7.3-1)

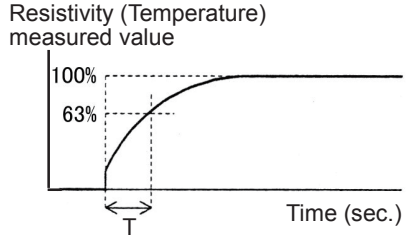

(Fig. 7.3-2)

7.4 EVT1 Action Group

To enter the EVT1 Action Group, follow the procedure below.

① EVT.a.1 Press the MODE key 3 times in Resistivity/Temperature Display Mode.

② EVT 1F Press the SET key.

The unit proceeds to the EVT1 Action Group, and "EVT1 type" will appear.

Character	Setting Item, Function, Setting Range	Factory Default
EVT 1F -----

• **EVT1 Action**

EVT1 Type	P Control Action	ON/OFF Control Action
Resistivity input low limit action, Temperature input low limit action (Activated based on indication value)	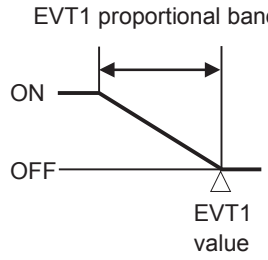	If Medium Value is selected in [EVT1 hysteresis type]: 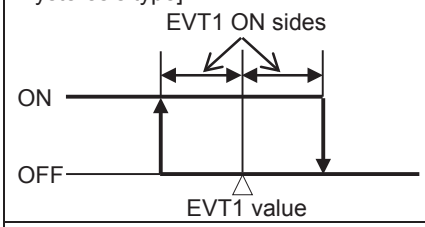 If Reference Value is selected in [EVT1 hysteresis type]: 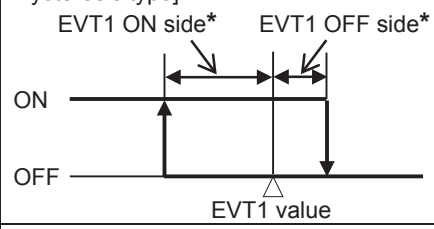
Resistivity input high limit action, Temperature input high limit action (Activated based on indication value)	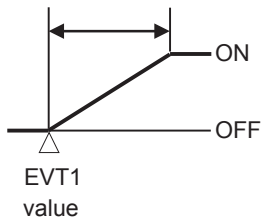	If Medium Value is selected in [EVT1 hysteresis type]: 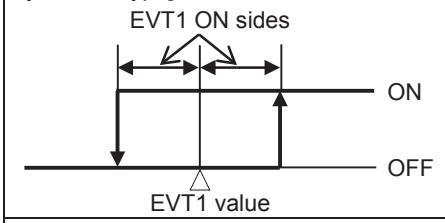 If Reference Value is selected in [EVT1 hysteresis type]: 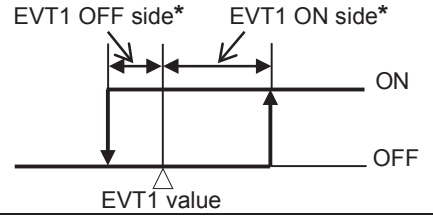

*** Setting Example:**

If [EVT1 ON side (E 1dFo)] is set to 0.00 or 0.0, EVT1 output can be turned ON at the value set in [EVT1 value (EVT 1)].

If [EVT1 OFF side (E 1dFU)] is set to 0.00 or 0.0, EVT1 output can be turned OFF at the value set in [EVT1 value (EVT 1)].

EVT1 Type	ON/OFF Control Action
Resistivity input High/Low limits independent action, Temperature input High/Low limits independent action (Activated based on indication value)	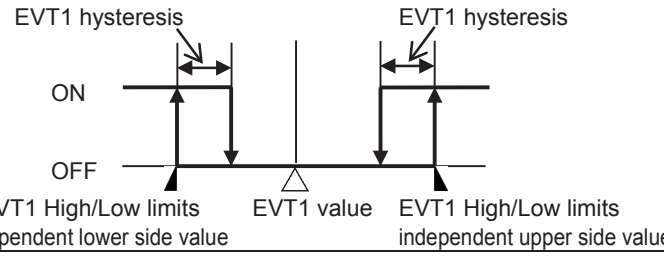

(Fig. 7.4-1)

Character	Setting Item, Function, Setting Range	Factory Default
EVT 1 □□0.00	**EVT1 value**	Resistivity input: Measurement range low limit Temperature input: 0.0℃
	• Sets EVT1 value. (Fig. 7.4-1) (p.28) • Not available if -------- (No action), ERROUT (Error output), FAIL□ (Fail output) or HEUL□ (Resistivity input error alarm output) is selected in [EVT1 type]. • Setting range: Resistivity input: Measurement range low limit to Measurement range high limit (*1) Temperature input: 0.0 to 100.0℃ (*2)	
EP 1□□ □□0.00	**EVT1 proportional band**	Resistivity input: Measurement range low limit Temperature input: 0.0℃
	• Sets EVT1 proportional band. (Fig. 7.4-1) (p.28) ON/OFF control action when set to 0.00 or 0.0. • Available when HE_L□ (Resistivity input low limit action), HE_H□ (Resistivity input high limit action), TEMPL (Temperature input low limit action) or TEMPH (Temperature input high limit action) is selected in [EVT1 type]. • Setting range: Resistivity input: Measurement range low limit to Measurement range high limit (*1) Temperature input: 0.0 to 100.0℃ (*2)	
E IRST □□0.00	**EVT1 reset**	Resistivity input: 0.00 MΩ•cm Temperature input: 0.0℃
	• Sets EVT1 reset value. • Available when HE_L□ (Resistivity input low limit action), HE_H□ (Resistivity input high limit action), TEMPL (Temperature input low limit action) or TEMPH (Temperature input high limit action) is selected in [EVT1 type]. • Not available for the ON/OFF control action. • Setting range: Resistivity input: ±Measurement span (*1) Temperature input: ±100.0℃ (*2)	
E IdI F HdI F□	**EVT1 hysteresis type**	Reference Value
	• Selects EVT1 output hysteresis type (Medium or Reference Value). (Fig. 7.4-1) (p.28) • Available when HE_L□ (Resistivity input low limit action), HE_H□ (Resistivity input high limit action), TEMPL (Temperature input low limit action) or TEMPH (Temperature input high limit action) is selected in [EVT1 type]. • Not available for the P control action. • cdI F□: Medium Value Sets the same value for both ON and OFF sides in relation to EVT1 value. Only ON side needs to be set. HdI F□: Reference Value Sets individual values for ON and OFF sides in relation to EVT1 value. Both ON and OFF sides need to be set individually.	

(*1) The unit and decimal point place follow the measurement range.
(*2) The decimal point place does not follow the selection. It is fixed.

Character	Setting Item, Function, Setting Range	Factory Default
E 1dFo □□0.10	**EVT1 ON side** • Sets the span of EVT1 ON side. (Fig. 7.4-1) (p.28) If cdi F□ (Medium Value) is selected in [EVT1 hysteresis type], the span of ON/OFF side will be the same value. • Available when SE_L□ (Resistivity input low limit action), SE_H□ (Resistivity input high limit action), TEMPL (Temperature input low limit action) or TEMPH (Temperature input high limit action) is selected in [EVT1 type]. • Not available for the P control action. • Setting range: Resistivity input: 0.00 to 20% of Measurement range high limit (*1) Temperature input: 0.0 to 10.0℃ (*2)	Resistivity input: 0.10 MΩ•cm Temperature input: 1.0℃
E 1dFU □□0.10	**EVT1 OFF side** • Sets the span of EVT1 OFF side. (Fig. 7.4-1) (p.28) • Available when SE_L□ (Resistivity input low limit action), SE_H□ (Resistivity input high limit action), TEMPL (Temperature input low limit action) or TEMPH (Temperature input high limit action) is selected in [EVT1 type]. • Not available for the P control action, or if cdi F□ (Medium Value) is selected in [EVT1 hysteresis type]. • Setting range: Resistivity input: 0.00 to 20% of Measurement range high limit (*1) Temperature input: 0.0 to 10.0℃ (*2)	Resistivity input: 0.10 MΩ•cm Temperature input: 1.0℃
E 1oNT □□□□0	**EVT1 ON delay time** • Sets EVT1 action delay time. The EVT1 output does not turn ON (under the conditions of turning ON) until the time set in [EVT1 ON delay time] elapses. • Not available if ------ (No action), EROUT (Error output), FAIL□ (Fail output) or SEUL□ (Resistivity input error alarm output) is selected in [EVT1 type]. • Not available for the P control action. • Setting range: 0 to 10000 seconds	0 seconds
E 1oFT □□□□0	**EVT1 OFF delay time** • Sets EVT1 action delay time. The EVT1 output does not turn OFF (under the conditions of turning OFF) until the time set in [EVT1 OFF delay time] elapses. • Not available if ------ (No action), EROUT (Error output), FAIL□ (Fail output) or SEUL□ (Resistivity input error alarm output) is selected in [EVT1 type]. • Not available for the P control action. • Setting range: 0 to 10000 seconds	0 seconds

(*1) The unit and decimal point place follow the measurement range.
(*2) The decimal point place does not follow the selection. It is fixed.

Character	Setting Item, Function, Setting Range	Factory Default
E 1c□□ □□□30	**EVT1 proportional cycle** • Sets EVT1 proportional cycle. • Available when 5E_L□ (Resistivity input low limit action), 5E_H□ (Resistivity input high limit action), TEMPL (Temperature input low limit action) or TEMPH (Temperature input high limit action) is selected in [EVT1 type]. • Not available for the ON/OFF control action. • Setting range: 1 to 300 seconds	30 seconds
E 1oLH □□ 100	**EVT1 output high limit** • Sets EVT1 output high limit value. • Available when 5E_L□ (Resistivity input low limit action), 5E_H□ (Resistivity input high limit action), TEMPL (Temperature input low limit action) or TEMPH (Temperature input high limit action) is selected in [EVT1 type]. • Not available for the ON/OFF control action. • Setting range: EVT1 output low limit to 100%	100%
E 1oLL □□□□0	**EVT1 output low limit** • Sets EVT1 output low limit value. • Available when 5E_L□ (Resistivity input low limit action), 5E_H□ (Resistivity input high limit action), TEMPL (Temperature input low limit action) or TEMPH (Temperature input high limit action) is selected in [EVT1 type]. • Not available for the ON/OFF control action. • Setting range: 0% to EVT1 output high limit	0%
ooN1 1 □□□□0	**Output ON Time when EVT1 output ON** • Sets Output ON time when EVT1 output is ON. If Output ON time and Output OFF time are set, EVT1 output can be turned ON/OFF in a configured cycle when EVT1 output is ON. (Fig. 7.4-2) (p.32) • Available when 5E_L□ (Resistivity input low limit action), 5E_H□ (Resistivity input high limit action), TEMPL (Temperature input low limit action) or TEMPH (Temperature input high limit action) is selected in [EVT1 type]. • Not available for P control action • Setting range: 0 to 10000 seconds	0 seconds
ooF1 1 □□□□0	**Output OFF Time when EVT1 output ON** • Sets Output OFF time when EVT1 output is ON. If Output ON time and Output OFF time are set, EVT1 output can be turned ON/OFF in a configured cycle when EVT1 output is ON. (Fig. 7.4-2) (p.32) • Available when 5E_L□ (Resistivity input low limit action), 5E_H□ (Resistivity input high limit action), TEMPL (Temperature input low limit action) or TEMPH (Temperature input high limit action) is selected in [EVT1 type]. • Not available for P control action • Setting range: 0 to 10000 seconds	0 seconds

Character	Setting Item, Function, Setting Range	Factory Default
	Timing chart (Output ON time and OFF time when EVT1 output is ON) 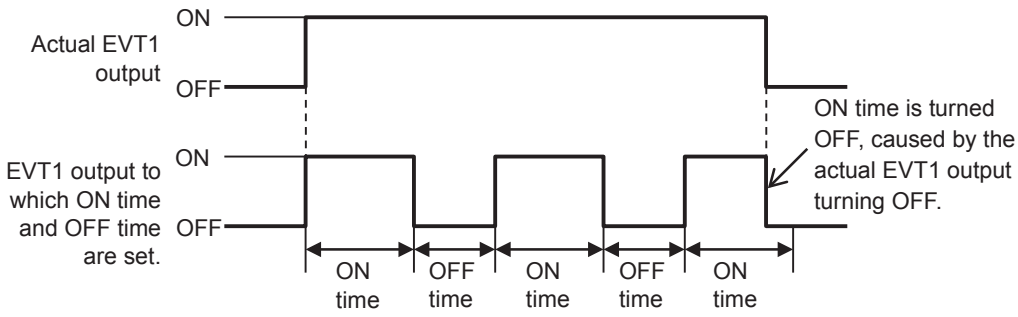 (Fig. 7.4-2)	
E 1c4□ -----□	**EVT1 resistivity input error alarm EVT□ type**	No action
	• Selects EVT□ type (except EVT1 type) in order to assess EVT1 resistivity input error alarm. • Available only when 4EUL□ (Resistivity input error alarm output) is selected in [EVT1 type]. • -----□ : No action EVT2□ : EVT2 type EVT3□ : EVT3 type EVT4□ : EVT4 type	
E 1Ao□ □□0.00	**EVT1 resistivity input error alarm band when EVT□ output ON**	Measurement range low limit
	• Sets band to assess EVT1 resistivity input error alarm when EVT□ output (selected in [EVT1 resistivity input error alarm EVT□ type]) is ON. • Available only when 4EUL□ (Resistivity input error alarm output) is selected in [EVT1 type]. • Setting range: Measurement range low limit to Measurement range high limit (*1) When set to 0.00, Resistivity input error alarm is disabled.	
E 1AoF □□□□0	**EVT1 resistivity input error alarm time when EVT□ output ON**	0 seconds
	• Sets time to assess EVT1 resistivity input error alarm when EVT□ output (selected in [EVT1 resistivity input error alarm EVT□ type]) is ON. • Available only when 4EUL□ (Resistivity input error alarm output) is selected in [EVT1 type]. • Setting range: 0 to 10000 seconds or minutes (*2) When set to 0, Resistivity input error alarm is disabled.	

(*1) The measurement unit and decimal point place follow the measurement range.
(*2) Time unit follows the selection in [Resistivity input error alarm time unit].

Character	Setting Item, Function, Setting Range	Factory Default
E 1Hc□ □□0.00	**EVT1 resistivity input error alarm band when EVT□ output OFF** • Sets band to assess EVT1 resistivity input error alarm when EVT□ output (selected in [EVT1 resistivity input error alarm EVT□ type]) is OFF. • Available only when HEUL□ (Resistivity input error alarm output) is selected in [EVT1 type]. • Setting range: Measurement range low limit to Measurement range high limit (*1) When set to 0.00, Resistivity input error alarm is disabled.	Measurement range low limit
E 1HcT □□□□0	**EVT1 resistivity input error alarm time when EVT□ output OFF** • Sets time to assess EVT1 resistivity input error alarm when EVT□ output (selected in [EVT1 resistivity input error alarm EVT□ type]) is OFF. • Available only when HEUL□ (Resistivity input error alarm output) is selected in [EVT1 type]. • Setting range: 0 to 10000 seconds or minutes (*2) When set to 0, Resistivity input error alarm is disabled.	0 seconds
MV2N1 □□50.0	**EVT1 cycle variable range** • Sets EVT1 cycle variable range. • Not available if ------ (No action), ERoUT (Error output), FAIL□ (Fail output) or HEUL□ (Resistivity input error alarm output) is selected in [EVT1 type]. • Not available for the ON/OFF control action. • Setting range: 1.0 to 100.0%	50.0%
cENT1 □□□□0	**EVT1 cycle extended time** • Sets EVT1 cycle extended time. • Not available if ------ (No action), ERoUT (Error output), FAIL□ (Fail output) or HEUL□ (Resistivity input error alarm output) is selected in [EVT1 type]. • Not available for the ON/OFF control action. • Setting range: 0 to 300 seconds	0 seconds

(*1) The measurement unit and decimal point place follow the measurement range.
(*2) Time unit follows the selection in [Resistivity input error alarm time unit].

Character	Setting Item, Function, Setting Range	Factory Default
E1_L□ □□0.00	**EVT1 High/Low limits independent lower side value**	Resistivity input: Measurement range low limit Temperature input: 0.0℃
	• Sets the lower side value of EVT1 High/Low limits independent action. (Fig. 7.4-1)(p.28) Disabled when set to 0.00 or 0.0℃. • Available when rE_HL (Resistivity input High/Low limits independent action), or rTEMHL (Temperature input High/Low limits independent action) is selected in [EVT1 type]. • Setting range: Resistivity input: Measurement range low limit to Measurement range high limit (*1) Temperature input: 0.0 to 100.0℃ (*2)	
E1_H□ □□0.00	**EVT1 High/Low limits independent upper side value**	Resistivity input: Measurement range low limit Temperature input: 0.0℃
	• Sets the upper side value of EVT1 High/Low limits independent action. (Fig. 7.4-1)(p.28) Disabled when set to 0.00 or 0.0℃. • Available when rE_HL (Resistivity input High/Low limits independent action), or rTEMHL (Temperature input High/Low limits independent action) is selected in [EVT1 type]. • Setting range: Resistivity input: Measurement range low limit to Measurement range high limit (*1) Temperature input: 0.0 to 100.0℃ (*2)	
E1_HY □□0.01	**EVT1 hysteresis**	Resistivity input: 0.01 MΩ•cm Temperature input: 1.0℃
	• Sets hysteresis of EVT1 High/Low limits independent action. (Fig. 7.4-1)(p.28) • Available when rE_HL (Resistivity input High/Low limits independent action), or rTEMHL (Temperature input High/Low limits independent action) is selected in [EVT1 type]. • Setting range: Resistivity input: 0.01 to 20% of Measurement range high limit (*1) Temperature input: 0.1 to 10.0℃ (*2)	

(*1) The measurement unit and decimal point place follow the measurement range.
(*2) The decimal point place does not follow the selection. It is fixed.

7.5 EVT2 Action Group

To enter the EVT2 Action Group, follow the procedure below.

① E.vT.a.2 Press the MODE key 4 times in Resistivity/Temperature Display Mode.

② EvT2F Press the SET key.
The unit proceeds to the EVT2 Action Group, and ”EVT2 type“ appears.

Action, indication condition and setting range of the EVT2 Action Group are the same as those of EVT1 Action Group.
Substitute EVT1 with EVT2, and refer to the EVT1 Action Group (pp. 27 to 34).

(e.g.) EvT 1F → EvT2F
E5v 1□ → E5v2□

7.6 EVT3 Action Group

EVT3 Action Group is indicated only when EVT3, EVT4 outputs (EVT3 option) are/is ordered.
To enter the EVT3 Action Group, follow the procedure below.

① E.vT.a.3 Press the MODE key 5 times in Resistivity/Temperature Display Mode.

② EvT3F Press the SET key.
The unit proceeds to the EVT3 Action Group, and ”EVT3 type“ appears.

Action, indication condition and setting range of the EVT3 Action Group are the same as those of EVT1 Action Group.
Substitute EVT1 with EVT3, and refer to the EVT1 Action Group (pp. 27 to 34).

(e.g.) EvT 1F → EvT3F
E5v 1□ → E5v3□

7.7 EVT4 Action Group

EVT4 Action Group is indicated only when EVT3, EVT4 outputs (EVT3 option) are/is ordered.
To enter the EVT4 Action Group, follow the procedure below.

① E.vT.a.4 Press the MODE key 6 times in Resistivity/Temperature Display Mode.

② EvT4F Press the SET key.
The unit proceeds to the EVT4 Action Group, and ”EVT4 type“ appears.

Action, indication condition and setting range of the EVT4 Action Group are the same as those of EVT1 Action Group.
Substitute EVT1 with EVT4, and refer to the EVT1 Action Group (pp. 27 to 34).

(e.g.) EvT 1F → EvT4F
E5v 1□ → E5v4□

7.8 Basic Function Group

To enter the Basic Function Group, follow the procedure below.

① aT.E.R Press the MODE key 5 times in Resistivity/Temperature Display Mode. If EVT3, EVT4 outputs (EVT3 option) are/is ordered, press the MODE key 7 times in Resistivity/Temperature Display Mode.

② Lock Press the SET key.

The unit enters the Basic Function Group, and the “Set value lock” will appear.

Character	Setting Item, Function, Setting Range	Factory Default
Lock -----	**Set value lock** • Locks the set values to prevent setting errors. • ----- (Unlock): All set values can be changed. Lock 1 (Lock 1) : None of the set values can be changed. Lock2 (Lock 2) : Only EVT1, EVT2, EVT3, EVT4 values can be changed. Lock3 (Lock 3) : All set values – except Measurement unit, Measurement range, Resistivity calibration value, Temperature calibration value, Transmission output 1 Zero and Span adjustment values, Transmission output 2 Zero and Span adjustment values – can be temporarily changed. However, they revert to their previous value after the power is turned off because they are not saved in the non-volatile IC memory. Do not change setting items (EVT1, EVT2, EVT3, EVT4 types). If they are changed, they will affect other setting items. Be sure to select Lock 3 when changing the set value frequently via software communication. (If the value set by the software communication is the same as the value before the setting, the value will not be written in the non-volatile IC memory.)	Unlock
cMSL NoML	**Communication protocol** • Selects communication protocol. • Available when the Serial communication (C5) option is ordered. • NoML : Shinko protocol ModA : MODBUS ASCII mode ModR : MODBUS RTU mode	Shinko protocol
cMNo 0	**Instrument number** • Sets the instrument number of this unit. (The instrument numbers should be set one by one when multiple instruments are connected.) • Available when the Serial communication (C5) option is ordered. • Setting range: 0 to 95	0

Character	Setting Item, Function, Setting Range	Factory Default
cMSP □□96	**Communication speed** • Selects a communication speed equal to that of the host computer. • Available when the Serial communication (C5 option) is ordered. • □□96 : 9600 bps □□192 : 19200 bps □□384 : 38400 bps	9600 bps
cMFT 7EVN	**Data bit/Parity** • Selects data bit and parity. • Available when the Serial communication (C5 option) is ordered. • 8NoN : 8 bits/No parity 7NoN : 7 bits/No parity 8EVN : 8 bits/Even 7EVN : 7 bits/Even 8odd : 8 bits/Odd 7odd : 7 bits/Odd	7 bits/Even
cMSt □□□1	**Stop bit** • Selects the stop bit. • Available when the Serial communication (C5 option) is ordered. • □□□1 : 1 bit □□□2 : 2 bits	1 bit
tRo1 SE□□	**Transmission output 1 type** • Selects Transmission output 1 type. • If oFF□□ (No temperature compensation) is selected in [Temperature compensation method (p.25)], and if TEMP□ (Temperature transmission) is selected, then transmission output 1 value will differ depending on the selection in [Temperature Display when no temperature compensation (p.41)] as follows. • If oFF□□ (Unlit) or Std□□ (Reference temperature) is selected, the value set in [Reference temperature (p.25)] will be output. • If PV□□□ (Measured value) is selected, the measured value will be output. • SE□□□: Resistivity transmission TEMP□: Temperature transmission MV 1□□: EVT1 MV transmission (*1) MV 2□□: EVT2 MV transmission MV 3□□: EVT3 MV transmission (*2) MV 4□□: EVT4 MV transmission (*2)	Resistivity transmission

(*1) Not available when Transmission output 2 (TA2 option) is ordered.
(*2) Available when EVT3, EVT4 outputs (EVT3 option) are/is ordered.

Character	Setting Item, Function, Setting Range	Factory Default
rRLH1 □20.00	**Transmission output 1 high limit**	Resistivity transmission: Measurement range high limit Temperature transmission: 100.0℃ MV transmission: 100.0%
	• Sets Transmission output 1 high limit value. (This value correponds to 20 mA DC output.) If Transmission output 1 high limit and low limit are set to the same value, Transmission output 1 will be fixed at 4mA DC. • Setting range: Resistivity transmission: Transmission output 1 low limit to Measurement range high limit (*1) Temperature transmission: Transmission output 1 low limit to 100.0℃ (*2) MV transmission: Transmission output 1 low limit to 100.0%	
rRLL1 □□0.00	**Transmission output 1 low limit**	Resistivity transmission: Measurement range low limit Temperature transmission: 0.0℃ MV transmission: 0.0%
	• Sets Transmission output 1 low limit value. (This value correponds to 4 mA DC output.) If Transmission output 1 high limit and low limit are set to the same value, Transmission output 1 will be fixed at 4mA DC. • Setting range: Resistivity transmission: Measurement range low limit to Transmission output 1 high limit (*1) Temperature transmission: 0.0℃ to Transmission output 1 high limit (*2) MV transmission: 0.0% to Transmission output 1 high limit	
rRo42 rEMP□	**Transmission output 2 type**	Temperature transmission
	• Selects Transmission output 2 type. • If oFF□□ (No temperature compensation) is selected in [Temperature compensation method (p.25)], and if rEMP□ (Temperature transmission) is selected, then transmission output 2 value will differ depending on the selection in [Temperature Display when no temperature compensation (p.41)] as follows. If oFF□□ (Unlit) or 4rd□□ (Reference temperature) is selected, the value set in [Reference temperature (p.25)] will be output. If PV□□□ (Measured value) is selected, the measured value will be output. • 4E□□□: Resistivity transmission rEMP□: Temperature transmission MV2□□: EVT2 MV transmission MV3□□: EVT3 MV transmission (*3) MV4□□: EVT4 MV transmission (*3)	
rRLH2 □100.0	**Transmission output 2 high limit**	Resistivity transmission: Measurement range high limit Temperature transmission: 100.0℃ MV transmission: 100.0%
	• Sets Transmission output 2 high limit value. (This value correponds to 20 mA DC output.). If Transmission output 2 high limit and low limit are set to the same value, Transmission output 2 will be fixed at 4 mA DC. • Setting range: Resistivity transmission: Transmission output 2 low limit to Measurement range high limit (*1) Temperature transmission: Transmission output 2 low limit to 100.0℃(*2) MV transmission: Transmission output 2 low limit to 100.0%	

(*1) The measurement unit and decimal point place follow the measurement range.
(*2) The decimal point place does not follow the selection. It is fixed.
(*3) Available when EVT3, EVT4 outputs (EVT3 option) are/is ordered.

Character	Setting Item, Function, Setting Range	Factory Default
rLL2 □□□0.0	**Transmission output 2 low limit**	Resistivity transmission: Measurement range low limit Temperature transmission: 0.0℃ MV transmission: 0.0%
	• Sets Transmission output 2 low limit value. (This value correponds to 4 mA DC output.). If Transmission output 2 high limit and low limit are set to the same value, Transmission output 2 will be fixed at 4 mA DC. • Setting Range: Resistivity transmission: Measurement range low limit to Transmission output 2 high limit (*1) Temperature transmission: 0.0℃ to Transmission output 2 high limit (*2) MV transmission: 0.0% to Transmission output 2 high limit	
rCS1 bEFH□	**Transmission output 1 status when calibrating**	Last value HOLD
	• Selects Transmission output 1 status when calibrating resistivity. • bEFH□: Last value HOLD (Retains the last value before resistivity calibration Span adjustment, and outputs it.) SEtH□: Set value HOLD (Outputs the value set in [Transmission output 1 value HOLD when calibrating].) PVH□□: Measured value (Outputs the measured value at the time of resistivity calibration Span adjustment.)	
rS1E1 □□0.00	**Transmission output 1 value HOLD when calibrating**	Resistivity transmission: Measurement range low limit Temperature transmission: 0.0℃ MV transmission: 0.0%
	• Sets Transmission output 1 value HOLD. • Available only when SEtH□ (Set value HOLD) is selected in [Transmission output 1 status when calibrating]. • Setting range: Resistivity transmission: Measurement range low limit to high limit (*1) Temperature transmission: 0.0 to 100.0℃ (*2) MV transmission: 0.0 to 100.0%	
rCS2 bEFH□	**Transmission output 2 status when calibrating**	Last value HOLD
	• Selects Transmission output 2 status when calibrating resistivity. • bEFH□: Last value HOLD (Retains the last value before resistivity calibration Span adjustment, and outputs it.) SEtH□: Set value HOLD (Outputs the value set in [Transmission output 2 value HOLD when calibrating].) PVH□□: Measured value (Outputs the measured value at the time of resistivity calibration Span adjustment.)	
rS2E2 □□□0.0	**Transmission output 2 value HOLD when calibrating**	Resistivity transmission: Measurement range low limit Temperature transmission: 0.0℃ MV transmission: 0.0%
	• Sets Transmission output 2 value HOLD. • Available only when SEtH□ (Set value HOLD) is selected in [Transmission output 2 status when calibrating]. • Setting range Resistivity transmission: Measurement range low limit to Measurement range high limit (*1) Temperature transmission: 0.0 to 100.0℃ (*2) MV transmission: 0.0 to 100.0%	

(*1) The measurement unit and decimal point place follow the measurement range.
(*2) The decimal point place does not follow the selection. It is fixed.

Character	Setting Item, Function, Setting Range	Factory Default
bKLT ALL	**Backlight selection** • Selects the display to backlight. • ALL : All are backlit. SE : Resistivity Display is backlit. TEMP : Temperature Display is backlit. Ac : Action indicators are backlit. SETMP : Resistivity Display + Temperature Display are backlit. SEAc : Resistivity Display + Action indicators are backlit. TMPAc : Temperature Display + Action indicators are backlit.	All are backlit.
coLR REd	**Resistivity color** • Selects a color for the Resistivity Display. • GRN : Green REd : Red oRG : Orange SEGR : Resistivity color changes continuously. (Fig. 7.8-1) The Resistivity display color changes according to [Resistivity color reference value] and [Resistivity color range] settings. • When resistivity is lower than [Resistivity color reference value] – [Resistivity color range]: Orange • When resistivity is within [Resistivity color reference value] ± [Resistivity color range]: Green • When resistivity is higher than [Resistivity color reference value] + [Resistivity color range]: Red 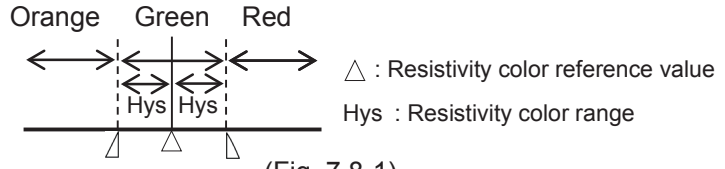 (Fig. 7.8-1)	Red
cLP 10.00	**Resistivity color reference value** • Sets a reference value for resistivity color to be green when SEGR (Resistivity color changes continuously) is selected in [Resistivity color]. • Setting range: 0.00 to Measurement range high limit (*)	10.00 MΩ•cm
cLRG 0.10	**Resistivity color range** • Sets a range for Resistivity color to be green when SEGR (Resistivity color changes continuously) is selected in [Resistivity color]. • Setting range: 0.10 to Measurement range high limit (*)	0.10 MΩ•cm
dPTM 0	**Backlight time** • Sets time to backlight from no operation status until backlight is switched off. When set to 0, the backlight remains ON. Backlight relights by pressing any key while backlight is OFF. • Setting range: 0 to 99 minutes	0 minutes

(*) The measurement unit and decimal point place follow the measurement range.

Character	Setting Item, Function, Setting Range	Factory Default
bERsL -----	**Bar graph indication** • Selects bar graph indication. • ----- : No indication rAoT 1 : Transmission output 1 rAoT2 : Transmission output 2 Segments will light in accordance with the output. Scale is -5 to 105%. Segments will light from left to right in accordance with the output. When output is 50% 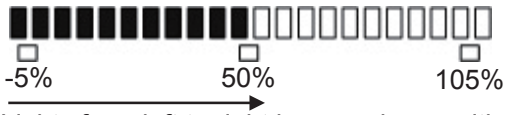 Lights from left to right in accordance with the output. (Fig. 7.8-2)	No indication
I NERR oFF□□	**EVT output when input errors occur** • If input errors occur, such as resistivity sensor disconnection or short circuit, EVT output Enabled/Disabled can be selected. If "Enabled" is selected, EVT output will be maintained when input errors occur. If "Disabled" is selected, EVT output will be turned OFF when input errors occur. • Available when SE_L□ (Resistivity input low limit action), SE_H□ (Resistivity input high limit action), TEMPL (Temperature input low limit action) or TEMPH (Temperature input high limit action) is selected in [EVT□ type]. • oFF□□ : Disabled oN□□□ : Enabled	Disabled
oFdP□ oFF□□	**Temperature Display when no temperature compensation** • Selects an item to be indicated on the Temperature Display when oFF□□ (No temperature compensation) is selected in [Temperature compensation method (p.25)]. • Available when oFF□□ (No temperature compensation) is selected in [Temperature compensation method (p.25)]. • oFF□□: Unlit rTd□□: Reference temperature Temperature set in [Reference temperature (p.25)] will be indicated. PV□□□: Measured value	Unlit
M_S□□ SEc□□	**Resistivity input error alarm time unit** • Selects resistivity input error alarm time unit. • Selection item: SEc□□: Second(s) MI N□□: Minute(s)	Second(s)

Character	Setting Item, Function, Setting Range	Factory Default
RcUF oFF	**Measurement range cut function** • Selects either Disabled or Enabled of the Measurement range cut function. Resistivity range high limit value will be indicated when resistivity measured value is outside the measurement range. • Selection item: oFF: Disabled oN: Enabled	Disabled

8. Calibration

The Resistivity calibration Span adjustment mode, Temperature calibration mode, and Transmission output 1 and 2 adjustment modes are described below.

8.1 Resistivity Calibration Span Adjustment Mode

Cell constant sometimes varies due to deterioration of 2-electrode Resistivity Sensor. To correct this cell constant, calibration is required.
Adjust the correction value so that resistivity input value matches the reference resistivity meter.

The following outlines the procedure for Resistivity calibration span adjustment.

① Press and hold the ▽ key and MODE key (in that order) together for 3 seconds in Resistivity/Temperature Display Mode.
The unit enters [Resistivity calibration Span adjustment mode], and indicates the following.

Display	Indication
Resistivity Display	AdJ4 and resistivity input value are indicated alternately.
Temperature Display	Resistivity Span adjustment value.

② Set the Resistivity Span adjustment value with the △ or ▽ key, while checking the reference resistivity meter.
Resistivity Span adjustment value: 0.700 to 1.300

③ Press the SET key.
The resistivity Span adjustment value will be registered, and the unit reverts to the Resistivity/Temperature Display Mode.

8.2 Temperature Calibration Mode

To calibrate a temperature, set a temperature calibration value.
If oFF (No temperature compensation) is selected in [Temperature compensation method (p.25)], and if oFF (Unlit) or rEd (Reference temperature) is selected in [Temperature Display when no temperature compensation (p.41)], Temperature calibration mode is not available.

When a sensor cannot be set at the exact location where measurement is desired, the resulting measured temperature may deviate from the temperature in the desired location. In this case, the desired temperature can be set for the desired location by setting a temperature calibration value. However, it is effective within the input rated range regardless of the temperature calibration value.
Temperature after calibration = Current temperature + (Temperature calibration value)
(e.g.) When current temperature is 23.5℃,
If temperature calibration value is set to 1.5℃: 23.5 + (1.5) = 25.0℃
If temperature calibration value is set to -1.5℃: 23.5 + (-1.5) = 22.0℃

The following outlines the procedure for Temperature calibration.

① Press and hold the △ key and MODE key (in that order) together for 3 seconds in Resistivity/Temperature Display Mode.
The unit will proceed to the Temperature calibration mode, and indicates the following.

Display	Indication
Resistivity Display	to and temperature are indicated alternately.
Temperature Display	Temperature calibration value

② Set a temperature calibration value with the △ or ▽ key while checking the temperature.
Setting range: -10.0 to 10.0℃

③ Press the SET key.
Temperature calibration is complete, and the unit reverts to Resistivity/Temperature Display Mode.

8.3 Transmission Output 1 Adjustment Mode

Fine adjustment of Transmission output 1 is performed.
The AER-102-SE is adjusted at the factory, however, differences may occur between the indication value of the connected equipment (recorders, etc.) and output value of this instrument.
In this case, perform Transmission output 1 Zero adjustment and Span adjustments.

The unit cannot enter Transmission output 1 Zero adjustment mode in the following cases:

- During Resistivity calibration Span adjustment mode or Temperature calibration mode
- When Lock 1 (Lock 1), Lock2 (Lock 2) or Lock3 (Lock 3) is selected in [Set value lock (p.36)]

The following outlines the procedure for Transmission output 1 adjustment.

① Press and hold the △ key and SET key (in that order) together for 3 seconds in Resistivity/Temperature Display Mode.
The unit enters Transmission output 1 Zero adjustment mode, and indicates the following.

Display	Indication
Resistivity Display	AJ2 1
Temperature Display	Transmission output 1 Zero adjustment value

② Set a Transmission output 1 Zero adjustment value with the △ or ▽ key, while viewing the value indicated on the connected equipment (recorders, etc.).
Setting range: ±5.00% of Transmission output 1 span

③ Press the SET key.
The unit enters Transmission output 1 Span adjustment mode, and indicates the following.

Display	Indication
Resistivity Display	AJ4 1
Temperature Display	Transmission output 1 Span adjustment value

④ Set a Transmission output 1 Span adjustment value with the △ or ▽ key, while viewing the value indicated on the connected equipment (recorders, etc.).
Setting range: ±5.00% of Transmission output 1 span

⑤ Press the MODE key.
The unit reverts to Transmission output 1 Zero adjustment mode.
Repeat steps ② to ⑤ if necessary.

⑥ To finish Transmission output 1 adjustment, press the SET key in Transmission output 1 Span adjustment mode.
The unit reverts to Resistivity/Temperature Display Mode.

8.4 Transmission Output 2 Adjustment Mode

Fine adjustment of Transmission output 2 is performed.
The AER-102-SE is adjusted at the factory, however, differences may occur between the indication value of the connected equipment (recorders, etc.) and output value of this instrument.
In this case, perform Transmission output 2 Zero adjustment and Span adjustments.

The unit cannot enter Transmission output 2 Zero adjustment mode in the following cases:

- During Resistivity calibration Span adjustment mode or Temperature calibration mode
- When Lock 1 (Lock 1), Lock2 (Lock 2) or Lock3 (Lock 3) is selected in [Set value lock (p.36)]

The following outlines the procedure for Transmission output 2 adjustment.

① Press and hold the ▽ key and SET key (in that order) together for 3 seconds in Resistivity/Temperature Display Mode.
The unit enters Transmission output 2 Zero adjustment mode, and indicates the following.

Display	Indication
Resistivity Display	AJ2□
Temperature Display	Transmission output 2 Zero adjustment value

② Set a Transmission output 2 Zero adjustment value with the △ or ▽ key, while viewing the value indicated on the connected equipment (recorders, etc.).
Setting range: ±5.00% of Transmission output 2 span

③ Press the SET key.
The unit enters Transmission output 2 Span adjustment mode, and indicates the following.

Display	Indication
Resistivity Display	AJ42□
Temperature Display	Transmission output 2 Span adjustment value

④ Set a Transmission output 2 Span adjustment value with the △ or ▽ key, while viewing the value indicated on the connected equipment (recorders, etc.).
Setting range: ±5.00% of Transmission output 2 span

⑤ Press the MODE key.
The unit reverts to Transmission output 2 Zero adjustment mode.
Repeat steps ② to ⑤ if necessary.

⑥ To finish Transmission output 2 adjustment, press the SET key in Transmission output 2 Span adjustment mode.
The unit reverts to Resistivity/Temperature Display Mode.

9. Measurement

9.1 Starting Measurement

After mounting to the control panel, wiring, setup and calibration are complete, turn the power to the instrument ON.

For approx. 4 seconds after the power is switched ON, the following characters are indicated on the Resistivity Display and Temperature Display.

Display	Character	Measurement Unit	
Resistivity Display	coNU	Resistivity (MΩ•cm)	
	kU	Resistivity (kΩ•m)	
Display	**Character**	**Input Temperature Spec** (*)	**[Pt100 Input Wire Type] Selection Item (P.25)**
Temperature Display	Pt 2	Pt100	2WIRE: 2-wire type
	Pt 3		3WIRE: 3-wire type
	Pt 10	Pt1000	

(*) This input temperature specification was specified at the time of ordering.

During this time, all outputs are in OFF status, and action indicators go off.

After that, measurement starts, indicating the item selected in [Backlight Selection (p.40)].

9.2 EVT1 to EVT4 Outputs

If rE_L□ (Resistivity input low limit action), rE_H□ (Resistivity input high limit action), TEMPL (Temperature input low limit action) or TEMPH (Temperature input high limit action) is selected in [EVT1 type (p.27)], the following action is activated. (Fig. 9.2-1)

The same applies to EVT2, EVT3 and EVT4.

• **EVT1 Action**

EVT1 Type	P Control Action	ON/OFF Control Action
Resistivity input low limit action, Temperature input low limit action (Activated based on indication value)	EVT1 proportional band 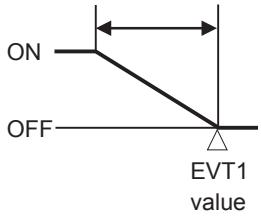	If Medium Value is selected in [EVT1 hysteresis type]: 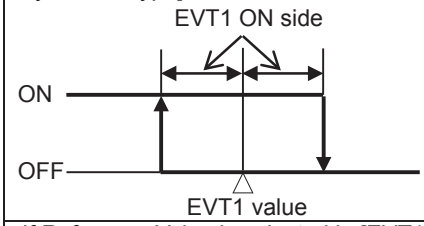 If Reference Value is selected in [EVT1 hysteresis type]: 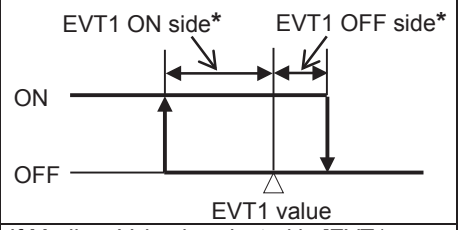
Resistivity input high limit action, Temperature input high limit action (Activated based on indication value)	EVT1 proportional band 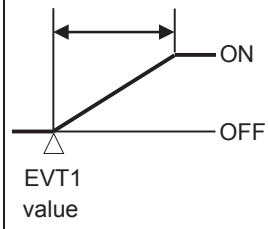	If Medium Value is selected in [EVT1 hysteresis type]: 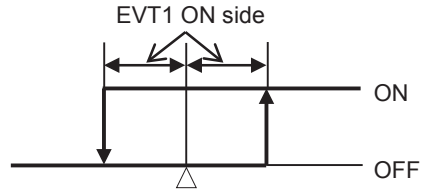 If Reference Value is selected in [EVT1 hysteresis type]: 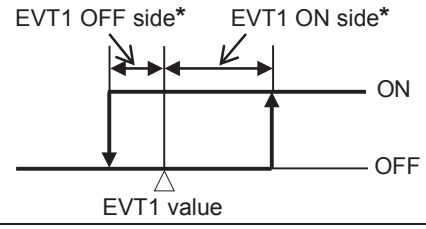

*** Setting Example:**

If [EVT1 ON side (E 1dFo)] is set to 0.00 or 0.0, EVT1 output can be turned ON at the value set in [EVT1 value (Ev1 1□)].

If [EVT1 OFF side (E 1dFU)] is set to 0.00 or 0.0, EVT1 output can be turned OFF at the value set in [EVT1 value (Ev1 1□)].

EVT1 Type	ON/OFF Control Action
Resistivity input High/Low limits independent action, Temperature input High/Low limits independent action (Activated based on indication value)	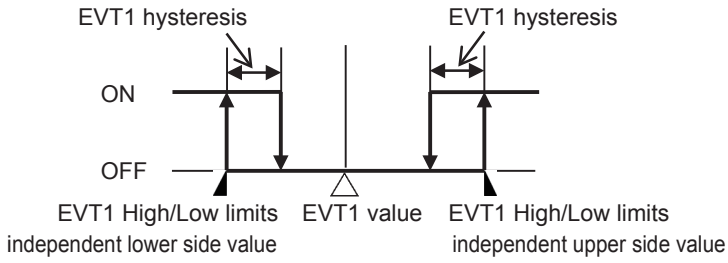

(Fig. 9.2-1)

• **P Control Action**

Within the proportional band, the manipulated variable is output in proportion to the deviation between the EVT1 value and measured value.

EVT1 Action	Description
Resistivity input low limit action, Temperature input low limit action	If measured value is lower than [EVT1 value – EVT1 proportional band], EVT1 output is turned ON. If measured value enters within the proportional band, EVT1 output is turned ON/OFF in EVT1 proportional cycles. If measured value exceeds the EVT1 value, EVT1 output is turned OFF.
Resistivity input high limit action, Temperature input high limit action	If measured value is higher than [EVT1 value + EVT1 proportional band], EVT1 output is turned ON. If measured value enters within the proportional band, EVT1 output is turned ON/OFF in EVT1 proportional cycles. If measured value drops below the EVT1 value, EVT1 output is turned OFF.

• **ON/OFF Control Action**

EVT1 Action	Description
Resistivity input low limit action, Temperature input low limit action	If measured value is lower than EVT1 value, EVT1 output is turned ON. If measured value exceeds the EVT1 value, EVT1 output is turned OFF.
Resistivity input high limit action, Temperature input high limit action	If measured value is higher than EVT1 value, EVT1 output is turned ON. If measured value drops below the EVT1 value, EVT1 output is turned OFF.

If Output ON time and OFF time are set in [Output ON time/OFF time when EVT1 output ON (p.31)], EVT1 output can be turned ON/OFF in a configured cycle when EVT1 output is ON.

Timing chart (Output ON time and OFF time when EVT1 output is ON)

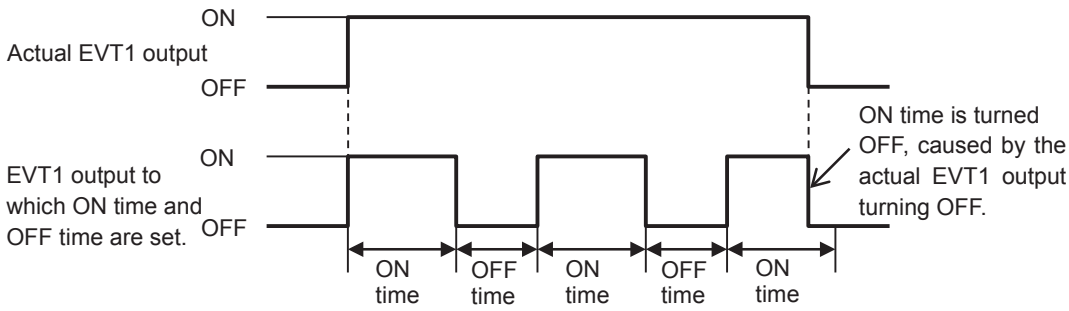

(Fig. 9.2-2)

EVT output status can be read by the status flag (EVT1, EVT2, EVT3, EVT4 output bit) in Serial communication (C5 option).

EVT output status, when input errors occur, differs depending on the selection in [EVT output when input errors occur (p.41)].

- If oFF (Disabled) is selected, EVT output will be turned OFF when input errors occur.
- If oN (Enabled) is selected, EVT output will be maintained when input errors occur.

9.3 Error Output

If ERoUT (Error output) is selected in [EVT1 type (p.27)], and when the error type is "Error" in (Table 9.7-1), the EVT1 output is turned ON.
The same applies to EVT2, EVT3 and EVT4.

9.4 Fail Output

If FAIL (Fail output) is selected in [EVT1 type (p.27)], and when the error type is "Fail" in (Table 9.7-1), the EVT1 output is turned ON.
The same applies to EVT2, EVT3 and EVT4.

9.5 Resistivity Input Error Alarm

Resistivity input error alarm is used for detecting actuator trouble.
Even if resistivity input error alarm time has elapsed, and if resistivity input does not become higher than resistivity input error alarm band, the unit assumes that actuator trouble has occurred, and sets Status flag 2 (EVT1, EVT2, EVT3, EVT4 output flag bit).
In Serial communication, status can be read by reading Status flag 2 (EVT1, EVT2, EVT3, EVT4 output flag bit).

If "rEUL" (Resistivity input error alarm output) is selected in [EVT1 type (p.27)], the EVT1 output is turned ON.
The same applies to EVT2, EVT3 and EVT4.

Resistivity input error alarm is disabled in the following cases.

- During resistivity calibration Span adjustment
- When Resistivity input error alarm time is set to 0 (zero) seconds or minutes, or Resistivity input error alarm band is set to 0.00.

9.6 Cycle Automatic Variable Function

If deviation between EVT□ value and measured value enters EVT□ cycle variable range, the proportional cycle will be automatically extended in accordance with the deviation.

Proportional action OFF time will be extended, and ON/OFF ratio will be adjusted.

However, if EVT□ cycle extended time is set to 0 (zero) seconds, this function will be disabled.

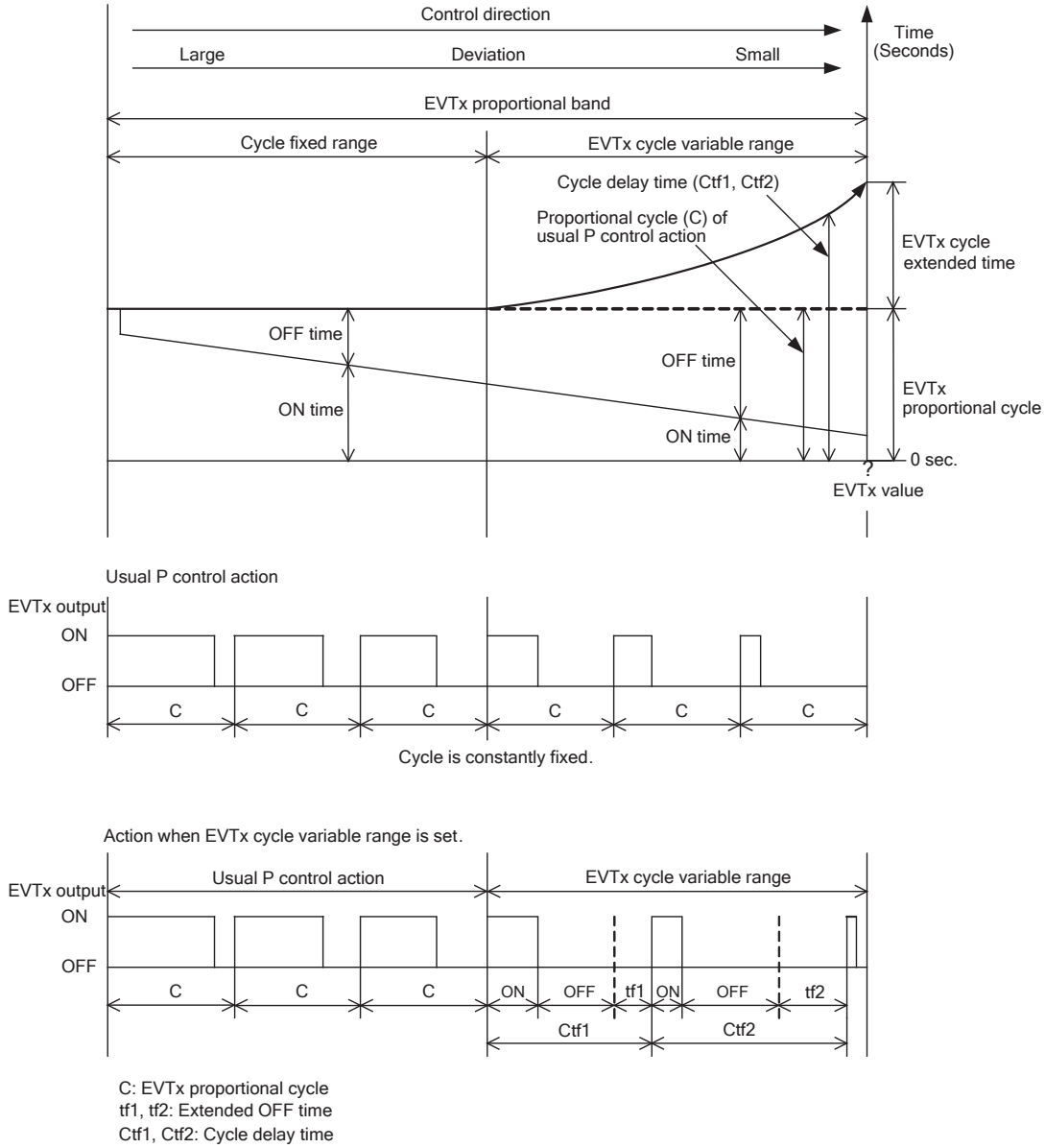

C: EVTx proportional cycle
tf1, tf2: Extended OFF time
Ctf1, Ctf2: Cycle delay time

(Fig. 9.6-1)

9.7 Error Code during Measurement

For temperature sensor error or outside temperature compensation range during measurement, their corresponding error codes flash on the Temperature Display as shown below in (Table 9.7-1).

(Table 9.7-1)

Error Code	Error Type	Error Contents	Description
ERR01	Fail	Temperature sensor burnout	Temperature sensor lead wire is burnt out.
ERR02	Fail	Temperature sensor short-circuited	Temperature sensor lead wire is short-circuited.
ERR03	Error	Outside temperature compensation range	Measured temperature has exceeded 110.0℃.
ERR04	Error	Outside temperature compensation range	Measured temperature is less than 0.0℃.

9.8 Setting EVT1 to EVT4 Values

EVT1 to EVT4 values are set in Simple Setting mode.
These setting items are the same as those in EVT1 to EVT4 Action Groups.
To enter Simple Setting mode, follow the procedure below.

① EVT 1□ Press the SET key in Resistivity/Temperature Display Mode.
"EVT1 value" will be indicated.

② Sets each item using the △ or ▽ key, and register the value with the SET key.

Character	Setting Item, Function, Setting Range	Factory Default
EVT 1□ □□0.00	**EVT1 value** • Sets EVT1 value. • Not available if -----(No action), EROUT (Error output), FAIL□ (Fail output) or HEUL□ (Resistivity input error alarm output) is selected in [EVT1 type (p.27)]. Not available if Transmission output 2 (TA2 option) is ordered. • Setting range: Resistivity input: Measurement range low limit to Measurement range high limit (*1) Temperature input: 0.0 to 100.0℃ (*2)	Resistivity input: Measurement range low limit Temperature input: 0.0℃
EVT2□ □□0.00	**EVT2 value** • Sets EVT2 value. • Not available if -----(No action), EROUT (Error output), FAIL□ (Fail output) or HEUL□ (Resistivity input error alarm output) is selected in [EVT2 type (p.27)]. • Setting range: Resistivity input: Measurement range low limit to Measurement range high limit (*1) Temperature input: 0.0 to 100.0℃ (*2)	Resistivity input: Measurement range low limit Temperature input: 0.0℃

(*1) The measurement unit and decimal point place follow the measurement range.
(*2) The decimal point place does not follow the selection. It is fixed.

Character	Setting Item, Function, Setting Range	Factory Default
EVT3 0.00	**EVT3 value** • Sets EVT3 value. • Not available if ----- (No action), ERoUT (Error output), FAIL (Fail output) or SEUL (Resistivity input error alarm output) is selected in [EVT3 type (p.27)]. Available when EVT3, EVT4 outputs (EVT3 option) are/is ordered. • Resistivity input: Measurement range low limit to Measurement range high limit (*1) Temperature input: 0.0 to 100.0℃ (*2)	Resistivity input: Measurement range low limit Temperature input: 0.0℃
EVT4 0.00	**EVT4 value** • Sets EVT4 value. • Not available if ----- (No action), ERoUT (Error output), FAIL (Fail output) or SEUL (Resistivity input error alarm output) is selected in [EVT4 type (p.27)]. Available when EVT3, EVT4 outputs (EVT3 option) are/is ordered. • Resistivity input: Measurement range low limit to Measurement range high limit (*1) Temperature input: 0.0 to 100.0℃ (*2)	Resistivity input: Measurement range low limit Temperature input: 0.0℃

(*1) The measurement unit and decimal point place follow the measurement range.
(*2) The decimal point place does not follow the selection. It is fixed.

③ Press the SET key. The unit reverts to Resistivity/Temperature Display Mode.

9.9 Transmission Output 1 and 2

Converting resistivity, temperature or MV to analog signal every input sampling period, outputs in current.

If oFF (No temperature compensation) is selected in [Temperature compensation method (p.25)], and if rEMP (Temperature transmission) is selected in [Transmission output 1 type (p.37)] or in [Transmission output 2 type (p.38)], Transmission output 1 or 2 value differs depending on the selection in [Temperature Display when no temperature compensation (p.41)].

- If oFF (Unlit) or SrEd (Reference temperature) is selected, the value set in [Reference temperature (p.25)] will be output.
- If PV (Measured value) is selected, the measured value will be output.

If Transmission output 1 high limit and low limit are set to the same value, Transmission output 1 will be fixed at 4 mA DC.
If Transmission output 2 high limit and low limit are set to the same value, Transmission output 2 will be fixed at 4 mA DC.

Resolution	12000
Current	4 to 20 mA DC (Load resistance: Max. 550 Ω)
Output accuracy	Within ±0.3% of Transmission output 1 or 2 span

10. Specifications

10.1 Standard specifications

Rating

Rated Scale	Input		Input Range	Resolution
	Resistivity	Cell constant 0.01/cm	0.000 to 0.200 MΩ•cm	0.001 MΩ•cm
			0.00 to 2.00 MΩ•cm	0.01 MΩ•cm
			0.00 to 20.00 MΩ•cm	0.01 MΩ•cm
			0.0 to 100.0 MΩ•cm	0.1 MΩ•cm
			0.00 to 2.00 kΩ•m	0.01 kΩ•m
			0.0 to 20.0 kΩ•m	0.1 kΩ•m
			0.0 to 200.0 kΩ•m	0.1 kΩ•m
			0 to 1000 kΩ•m	1 kΩ•m
	Temperature (*)	Pt100	0.0 to 100.0℃	0.1℃
		Pt1000	0.0 to 100.0℃	0.1℃
	(*) For the temperature indication, decimal point place can be selected.			
Input	2-electrode Resistivity Sensor (Temperature element Pt100) 2-electrode Resistivity Sensor (Temperature element Pt1000)			

Power Supply Voltage	Model	**AER-102-SE**	**AER-102-SE 1**
	Power supply voltage	100 to 240 V AC 50/60 Hz	24 V AC/DC 50/60 Hz
	Allowable voltage fluctuation range	85 to 264 V AC	20 to 28 V AC/DC

General Structure

External Dimensions	48 x 96 x 98.5 mm (W x H x D)	
Mounting	Flush (Applicable panel thickness: 1 to 8 mm)	
Case	Material: Flame-resistant resin, Color: Black	
Front Panel	Membrane sheet	
Drip-proof/Dust-proof	IP66 (for front panel only)	
Indication Structure	Display	
	Resistivity Display	11-segment LCD display 5-digit Backlight: Red/Green/Orange Character size: 14.0 x 5.4 mm (H x W)
	Temperature Display	11-segment LCD display 5-digit Backlight: Green Character size: 10.0 x 4.6 mm (H x W)
	Output Display	22-segment LCD display Bar graph Backlight: Green
	Action indicator: Backlight: Orange	
	EVT1	EVT1 output (Contact output 1) ON: Lit
	EVT2	EVT2 output (Contact output 2) ON: Lit
	EVT3	EVT3 output (Contact output 3) ON: Lit
	EVT4	EVT4 output (Contact output 4) ON: Lit
	T/R	Serial communication TX output (transmitting): Lit
	LOCK	Set Value Lock 1, 2, 3 selected: Lit
Setting Structure	Input system using membrane sheet key	

Indication Performance

Repeatability	±0.5% of measurement span
Linearity	±0.5% of measurement span
Indication Accuracy	Temperature: ±1℃
Input Sampling Period	250 ms (2 inputs)
Time Accuracy	Within ±1% of setting time

Standard Functions

Resistivity Calibration Span Adjustment	For Resistivity calibration Span adjustment, adjust so that resistivity input value matches the reference resistivity meter.		
Temperature Calibration	When a sensor cannot be set at the exact location where measurement is desired, the resulting measured temperature may deviate from the temperature in the desired location. In this case, the desired temperature can be set for the desired location by setting a temperature calibration value. However, it is effective within the input rated range regardless of the temperature calibration value.		
Transmission Output 1	Converting resistivity, temperature or MV to analog signal every input sampling period, and outputs the value in current. If oFF (No temperature compensation) is selected in [Temperature compensation method (p.25)], and if TEMP (Temperature transmission) is selected in [Transmission output 1 type (p.37)], Transmission output 1 value will differ depending on the selection in [Temperature Display when no temperature compensation (p.41)] as follows. • If oFF (Unlit) or Std (Reference temperature) is selected, the value set in [Reference temperature (p.25)] will be output. • If PV (Measured value) is selected, the measured value will be output. If Transmission output 1 high limit and low limit are set to the same value, Transmission output 1 will be fixed at 4 mA DC.		
		Resolution	12000
		Current	4 to 20 mA DC(Load resistance: Max. 550 Ω)
		Output accuracy	Within ±0.3% of Transmission output 1 span
	Transmission Output 1 Adjustment	Fine adjustment of the Transmission output 1 is performed via Transmission output 1 Zero and Span adjustments.	
	Transmission Output 1 Status when Calibrating	Selects Transmission output 1 status at the time of Resistivity calibration Span adjustment.	
		Last value HOLD	Retains the last value before Resistivity calibration Span adjustment, and outputs it.
		Set value HOLD	Outputs the value set in [Transmission output 1 value HOLD when calibrating]. (p.39)
		Measured value	Outputs the measured value at the time of Resistivity calibration Span adjustment.

<table>
<tr><td colspan="2">EVT Output</td><td colspan="3"></td></tr>
<tr><td></td><td>Output Action</td><td colspan="3">P control action: When setting the proportional band to any value except 0.00 or 0.0.
ON/OFF control action: When setting the proportional band to 0.00 or 0.0.</td></tr>
<tr><td></td><td></td><td rowspan="2">EVT□ proportional band</td><td>Resistivity input</td><td>Measurement range low limit to Measurement range high limit (*1)</td></tr>
<tr><td></td><td></td><td>Temperature input</td><td>0.0 to 100.0℃ (*2)</td></tr>
<tr><td></td><td></td><td colspan="2">EVT□ proportional cycle</td><td>1 to 300 seconds</td></tr>
<tr><td></td><td></td><td rowspan="2">EVT□ ON side,
EVT□ OFF side</td><td>Resistivity input</td><td>0 to 20% of Measurement range high limit (*1)</td></tr>
<tr><td></td><td></td><td>Temperature input</td><td>0.0 to 10.0℃ (*2)</td></tr>
<tr><td></td><td></td><td colspan="2">EVT□ output high limit, low limit</td><td>0 to 100%</td></tr>
<tr><td></td><td></td><td rowspan="2">EVT□ High/Low limits independent upper, lower side values</td><td>Resistivity input</td><td>Measurement range low limit to Measurement range high limit (*1)</td></tr>
<tr><td></td><td></td><td>Temperature input</td><td>0.0 to 100.0℃ (*2)</td></tr>
<tr><td></td><td></td><td rowspan="2">EVT□ hysteresis</td><td>Resistivity input</td><td>1 to 20% of Measurement range high limit (*1)</td></tr>
<tr><td></td><td></td><td>Temperature input</td><td>0.1 to 10.0℃ (*2)</td></tr>
<tr><td></td><td></td><td colspan="3">(*1) The measurement unit and decimal point place follow the measurement range.
(*2) The decimal point place does not follow the selection. It is fixed.</td></tr>
<tr><td></td><td>Type</td><td colspan="3">Selectable by the keypad from the following.
[See EVT1 action. (Fig. 9.2-1) (pp. 47, 48)]
• No action
• Resistivity input low limit action
• Resistivity input high limit action
• Temperature input low limit action
• Temperature input high limit action
• Error output
• Fail output
• Resistivity input error alarm output
• Resistivity input High/Low limits independent action
• Temperature input High/Low limits independent action</td></tr>
<tr><td></td><td rowspan="3">Output</td><td colspan="3">Relay contact 1a</td></tr>
<tr><td></td><td></td><td>Control capacity</td><td>3 A 250 V AC(resistive load)
1 A 250 V AC(inductive load cosϕ=0.4)</td></tr>
<tr><td></td><td></td><td>Electrical life</td><td>100,000 cycles</td></tr>
<tr><td></td><td>EVT□ ON delay time</td><td colspan="3">0 to 10000 seconds</td></tr>
<tr><td></td><td>EVT□ OFFdelay time</td><td colspan="3">0 to 10000 seconds</td></tr>
<tr><td></td><td>Output ON Time/ OFF Time when EVT□ Output ON</td><td colspan="3">If ON time and OFF time are set, the output can be turned ON/OFF in a configured cycle when EVT□ output is ON. See “Timing chart (Output ON time and OFF time when EVT1 output is ON)”. (Fig. 9.2-2) (p.49)</td></tr>
</table>

	Resistivity Input Error Alarm	Detects actuator trouble. Even if resistivity input error alarm time has elapsed, and if resistivity input does not become higher than resistivity input error alarm band, the unit assumes that actuator trouble has occurred, and sets Status flag 2 (EVT1, EVT2, EVT3, EVT4 output flag bit). In Serial communication, status can be read by reading Status flag 2 (EVT1, EVT2, EVT3, EVT4 output flag bit). When 4EUL□ (Resistivity input error alarm output) is selected in [EVT1 type (p.27)], EVT1 output is turned ON. The same applies to EVT2, EVT3 and EVT4. Resistivity input error alarm is disabled in the following cases. • During resistivity calibration Span adjustment • When Resistivity input error alarm time is set to 0 (zero) seconds or minutes, or Resistivity input error alarm band is set to 0.00.
	Cycle Automatic Variable Function	If deviation between EVT□ value and measured value enters EVT□ cycle variable range, the proportional cycle will be automatically extended in accordance with the deviation. Proportional action OFF time will be extended, and ON/ OFF ratio will be adjusted. However, if EVT□ cycle extended time is set to 0 (zero) seconds, this function will be disabled.

Insulation, Dielectric Strength

Circuit Insulation Configuration	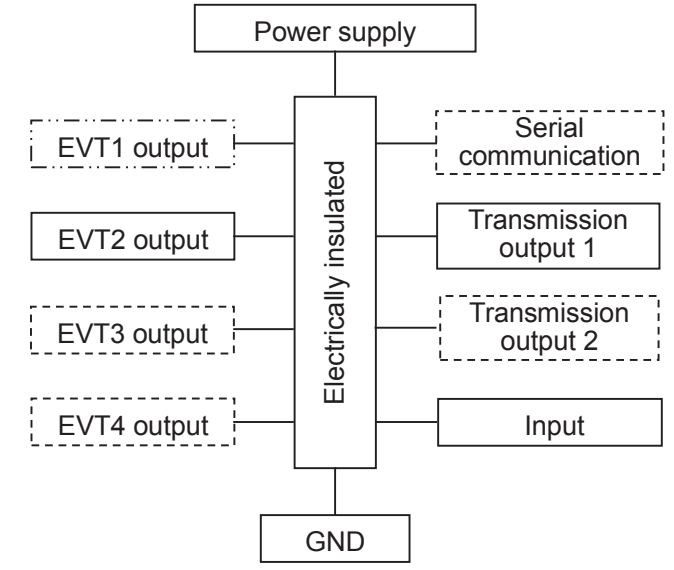 : Available when the corresponding option is ordered. : Not available if TA2 option is ordered. Insulation Resistance: 10 MΩ minimum, at 500 V DC
Dielectric Strength	Power terminal - ground (GND): 1.5 kV AC for 1 minute Input terminal - ground (GND): 1.5 kV AC for 1 minute Input terminal - power terminal: 1.5 kV AC for 1 minute

Attached Functions

Set Value Lock	Lock 1: None of the set values can be changed. Lock 2: Only EVT1, EVT2, EVT3, EVT4 values can be changed. Lock 3: All set values – except Measurement unit, Measurement range, Resistivity calibration value, Temperature calibration value, Transmission output 1 Zero and Span adjustment values, Transmission output 2 Zero and Span adjustment values – can be temporarily changed. However, they revert to their previous value after the power is turned off because they are not saved in the non-volatile IC memory.
Resistivity Input Sensor Correction	This corrects the input value from the resistivity sensor. When sensor-measured resistivity may deviate from the resistivity in the measured location, the desired resistivity can be obtained by adding a sensor correction value. However, it is effective within the measurement range regardless of the sensor correction value.
Temperature Display when No Temperature Compensation	If oFF□□ (No temperature compensation) is selected in [Temperature compensation method (p.25)], the item to be indicated on the Temperature Display can be selected.
Cable Length Correction	If 2WIRE (2-wire type) is selected in [Pt100 input wire type (p.25)], and if sensor cable is too long, temperature measurement error will occur due to cable resistance. This can be corrected by setting the cable length correction value and cable cross-section area.

Larger than Clip Value, and Smaller than Measurement Range High Limit

Resistivity Display				Temperature Display
Temperature compensation method (p.25)		Measurement range cut function (p.42)		Measured temperature
PURE□ (*1)	Less than ultrapure water value	oFF□□ (Disabled)	Clip value lights. (*2)	
		oN□□□ (Enabled)		
	Exceeding ultrapure water value	oFF□□ (Disabled)	Ultrapure water value flashes. (*3)	
		oN□□□ (Enabled)	Ultrapure water value lights. (*3)	
Any other items except PURE□		oFF□□ (Disabled)	Clip value flashes. (*2)	
		oN□□□ (Enabled)	Clip value lights. (*2)	

(*1) When PURE□ is selected in [Temperature compensation method], the resistivity measured value can be indicated only up to the ultrapure water value.
(*2) Transmission output is fixed at the clip value.
(*3) Transmission output is fixed at the selected ultrapure water value.

<table>
<tr><td>Outside Measurement Range</td><td>
When Resistivity input value is outside the measurement range, the following is indicated.
<table>
<tr><th colspan="2">Resistivity Display</th><th>Temperature Display</th></tr>
<tr><td colspan="2">Resistivity measured value is higher than the Measurement range high limit:</td><td rowspan="4">Measured temperature</td></tr>
<tr><td>Measurement range cut function (p.42)</td><td></td></tr>
<tr><td>oFF (Disabled)</td><td>Measurement range high limit value flashes.</td></tr>
<tr><td>oN (Enabled)</td><td>Measurement range high limit value lights.</td></tr>
</table>
When measured temperature is outside the measurement range, the following is indicated.
<table>
<tr><th>Resistivity Display</th><th>Temperature Display</th></tr>
<tr><td>Resistivity input value</td><td>Exceeding 110.0℃: ERR03</td></tr>
<tr><td>Resistivity input value</td><td>Less than 0.0℃: ERR04</td></tr>
</table>
</td></tr>
<tr><td>Power Failure Countermeasure</td><td>The setting data is backed up in the non-volatile IC memory.</td></tr>
<tr><td>Self-diagnosis</td><td>The CPU is monitored by a watchdog timer, and if an abnormal status occurs, the AER-102-SE is switched to warm-up status.</td></tr>
<tr><td>Bar Graph Indication</td><td>
When rAnG 1 (Transmission output 1) or rAnG2 (Transmission output 2) is selected in [Bar graph indication (p.41)], segments light in accordance with the output.
Scale is -5 to 105%. Segments will light from left to right in accordance with the output.
(e.g.) When output is 50%
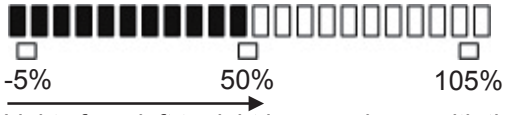
-5% 50% 105%
Lights from left to right in accordance with the output.
</td></tr>
<tr><td>Warm-up Indication</td><td>
For approx. 4 seconds after the power is switched ON, the characters below are indicated on the Resistivity Display and Temperature Display.
<table>
<tr><th>Display</th><th>Character</th><th colspan="2">Measurement Unit</th></tr>
<tr><td rowspan="2">ResistivityDisplay</td><td>coNU</td><td colspan="2">Resistivity (MΩ•cm)</td></tr>
<tr><td>kI</td><td colspan="2">Resistivity (kΩ•m)</td></tr>
<tr><th>Display</th><th>Character</th><th>Input Temperature Spec. (*)</th><th>[Pt100 input wire type] Selection Item (p.25)</th></tr>
<tr><td rowspan="3">Temperature Display</td><td>Pt 2</td><td rowspan="2">Pt100</td><td>2WI RE: 2-wire type</td></tr>
<tr><td>Pt 3</td><td>3WI RE: 3-wire type</td></tr>
<tr><td>Pt 10</td><td>Pt1000</td><td></td></tr>
</table>
(*) This input temperature specification was specified at the time of ordering.
(Abbreviation: Spec: Specification)
</td></tr>
</table>

Resistivity Color Selection	Selects the Resistivity Display color.	
	[Resistivity Color] Selection Item (p.40)	**Resistivity Display Color**
	GRN	Green
	REd	Red
	oRG	Orange
	4ECR	Resistivity color changes continuously.
	Resistivity color changes continuously: Resistivity Display color changes according to [Resistivity color reference value (p.40)] and [Resistivity color range (p.40)] settings. • When resistivity is lower than [Resistivity color reference value] – [Resistivity color range]: Orange • When resistivity is within [Resistivity color reference value] ± [Resistivity color range]: Green • When resistivity is higher than [Resistivity color reference value] + [Resistivity color range]: Red 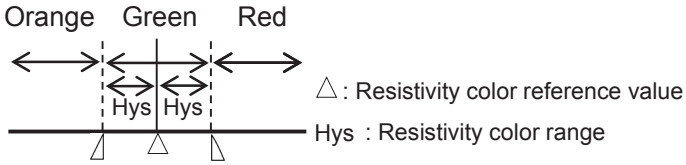	

Error Code

Error Code			Error codes below flash on the Temperature Display.	
Error Code	**Error Type**	**Error Contents**	**Description**	**Occur-rence**
ERR01	Fail	Temperature sensor burnout	Temperature sensor lead wire is burnt out.	When Measuring and calibrating
ERR02	Fail	Temperature sensor short-circuited	Temperature sensor lead wire is short-circuited.	
ERR03	Error	Outside temperature compensation range	Measured temperature has exceeded 110.0℃.	
ERR04	Error	Outside temperature compensation range	Measured temperature is less than 0.0℃.	

Other

Power Consumption	Approx. 13 VA
Ambient Temperature	0 to 50℃
Ambient Humidity	35 to 85 %RH (Non-condensing)
Weight	Approx. 280 g
Accessories Included	Unit label: 1 sheet Mounting brackets: 1 set Instruction manual: 1 copy Inspection report: 1 sheet When Serial communication (C5 option) is ordered: Wire harness C5J (0.2 m): 1 length Wire harness C0J (3 m): 1 length When EVT3, EVT4 outputs (Contact output 3, 4) (EVT3 option) are/is ordered: Wire harness HBJ (3 m): 2 lengths
Accessories Sold Separately	Terminal cover

10.2 Optional Specifications

Serial Communication (Option code: C5)

Serial Communication		The following operations can be carried out from an external computer. (1) Reading and setting of various set values (2) Reading of resistivity, temperature and status (3) Function change (4) Reading and setting of user save area			
	Cable Length	1.2 km (Max), Cable resistance value: Within 50 Ω (Terminators are not necessary, but if used, use 120 Ω minimum on both sides.)			
	Communication Line	EIA RS-485			
	Communication Method	Half-duplex communication			
	Communication Speed	9600, 19200, 38400 bps (Selectable by keypad)			
	Synchronization Method	Start-stop synchronization			
	Code Form	ASCII, Binary			
	Communication Protocol	Shinko protocol, MODBUS ASCII, MODBUS RTU (Selectable by keypad)			
	Data Bit/Parity	8 bits/No parity, 7 bits/No parity, 8 bits/Even, 7 bits/Even, 8 bits/Odd, 7 bits/Odd (Selectable by keypad)			
	Stop Bit	1, 2 (Selectable by keypad)			
	Error Correction	Command request repeat system			
	Error Detection	Parity check, Checksum (Shinko protocol), LRC (MODBUS protocol ASCII), CRC-16 (MODBUS protocol RTU)			
	Data Format	Communication Protocol	**Shinko Protocol**	**MODBUS ASCII**	**MODBUS RTU**
		Start bit	1	1	1
		Data bit	7	7 (8) Selectable	8
		Parity	Even	Even (No parity, Odd) Selectable	No parity (Even, Odd) Selectable
		Stop bit	1	1 (2) Selectable	1 (2) Selectable

EVT3, EVT4 Outputs (Contact output 3, 4) (Option code: EVT3)

EVT3, EVT4 Outputs (Contact output 3, 4)	Same as EVT output (p.57)

Transmission Output 2 (Option Code: TA2)

<table>
<tr><td colspan="2">Transmission Output 2</td><td colspan="2">Converting resistivity, temperature or MV to analog signal every input sampling period, and outputs the value in current.
If oFF (No temperature compensation) is selected in [Temperature compensation method (p.25)], and if TEMP (Temperature transmission) is selected in [Transmission output 2 type (p.38)], Transmission output 2 value will differ depending on the selection in [Temperature Display when no temperature compensation (p.41)] as follows.
• If oFF (Unlit) or Std (Reference temperature) is selected, the value set in [Reference temperature (p.25)] will be output.
• If PV (Measured value) is selected, the measured value will be output.

If Transmission output 2 high limit and low limit are set to the same value, Transmission output 2 will be fixed at 4 mA DC.</td></tr>
<tr><td colspan="2"></td><td>Resolution</td><td>12000</td></tr>
<tr><td colspan="2"></td><td>Current</td><td>4 to 20 mA DC
(Load resistance: Max. 550 Ω)</td></tr>
<tr><td colspan="2"></td><td>Output accuracy</td><td>Within ±0.3% of Transmission output 2 span</td></tr>
<tr><td></td><td>Transmission Output 2 Adjustment</td><td colspan="2">Fine adjustment of Transmission output 2 can be performed via Transmission output 2 Zero adjustment and Span adjustment.</td></tr>
<tr><td></td><td>Transmission Output 2 Status when Calibrating</td><td colspan="2">Transmission output 2 status can be selected at the time of Resistivity calibration Span adjustment.
Last value HOLD: Retains the last value before Resistivity calibration Span adjustment, and outputs it.
Set value HOLD: Outputs the value set in [Transmission output 2 value HOLD when calibrating]. (p.39)
Measured value: Outputs the measured value at the time of Resistivity calibration Span adjustment.</td></tr>
</table>

11. Troubleshooting

If any malfunction occurs, refer to the following items after checking that power is being supplied to the AER-102-SE.

11.1 Indication

Problem	Possible Cause	Solution
The Resistivity Display or Temperature Display is unlit.	The time set in [Backlight time (p.40)] **h**as passed.	If any key is pressed while displays are unlit, it will re-light. Set the backlight time to a suitable time-frame.
Indication of the Resistivity Display or Temperature Display is unstable or irregular.	Resistivity calibration and temperature calibration may not have finished.	Perform resistivity calibration and temperature calibration.
	Temperature compensation method might not be selected correctly.	Select a correct Temperature compensation method.
	Specification of the resistivity sensor may not be suitable.	Replace the sensor with a suitable one.
	There may be equipment that interferes with or makes noise near the AER-102-SE.	Keep AER-102-SE clear of any potentially disruptive equipment.
The Temperature Display is unlit.	oFF (Unlit) is selected in [Temperature Display when no temperature compensation (p.41)].	Select SrEd (Reference temperature) or PV (Measured value).
[ERR0 1] is flashing on the Temperature Display.	The temperature sensor lead wire is burnt out.	Replace with a new resistivity sensor.
[ERR02] is flashing on the Temperature Display.	The temperature sensor lead wire is short-circuited.	Replace with a new resistivity sensor.
[ERR03] is flashing on the Temperature Display.	The measured temperature value has exceeded 110.0℃.	Check the measuring environment.
[ERR04] is flashing on the Temperature Display.	The measured temperature value is less than 0.0℃.	Check the measuring environment.
[ERR 1] is indicating on the Resistivity Display.	Internal memory is defective.	Contact our agency or us.

11.2 Key Operation

Problem	Possible Cause	Solution
Unable to set values. The values do not change by the △ or ▽ key.	Lock 1 (Lock 1) or Lock2 (Lock 2) is selected in [Set value lock (p.36)]. (The LOCK indicator is lit when Lock 1 or Lock 2 is selected.)	Select ----- (Unlock).

12. Temperature Compensation Method

12.1 How to Input Temperature Coefficient

Temperature compensation is conducted using temperature coefficient (%/℃) and a randomly selected reference temperature.

Conductivity of the solution varies depending on the temperature.

If solution temperature rises by 1℃, the conductivity rises by 2% at 25℃ basis in general.

Temperature coefficient differs depending on the solution type and its concentration, which ranges from 0.50 to 2.50.

By inputting the temperature coefficient, temperature compensation can be calculated to find the conductivity at 25℃.

Temperature coefficient 2.00 %/℃ can be used for most of solutions.

If temperature coefficient of solution is already-known, enter the value.

If the conductivity at an arbitrary temperature T℃ is already-known, and if reference temperature is ST℃, conductivity $C_{(ST)}$ at the reference temperature can be obtained according to the following formula.

$$C_{(ST)} = \frac{C_{(T)}}{(1 + 0.01 \times \alpha \times (T - ST))}$$

$C_{(ST)}$: Conductivity of the solution at ST℃

$C_{(T)}$: Conductivity of the solution at T℃

α : Temperature coefficient of conductivity (%)

T: Arbitrary temperature T℃

ST: Reference temperature ST℃

12.2 Temperature Compensation Based on the Temperature Characteristics of Deionized Water

Conductivity of deionized water is calculated by adding conductivity of deionized water to conductivity caused by ionic impurities.

$C_{(T)} = F_{(T)} + G_{(T)}$

$C_{(T)}$: Conductivity of solution at T℃

$F_{(T)}$: Conductivity of deionized water at T℃

$G_{(T)}$: Conductivity caused by ionic impurities at T℃

Conductivity of Deionized Water

Conductivity of deionized water is caused by dissociation of water molecules.

The dissociation of water molecules is greatly affected by the change of temperature.

Conductivity of deionized water is measured based on the characteristics in (Table 12.2-1) (ASTM D 1125-91, JISK0130-1995).

(Table 12.2-1)

Temperature (℃)	Conductivity (μS/cm)
0	0.012
5	0.017
10	0.023
15	0.031
20	0.042
25	0.055
30	0.071
35	0.090
40	0.114
45	0.141
50	0.173
55	0.210
60	0.251
65	0.299
70	0.352
75	0.410
80	0.474
85	0.544
90	0.621
95	0.703
100	0.793

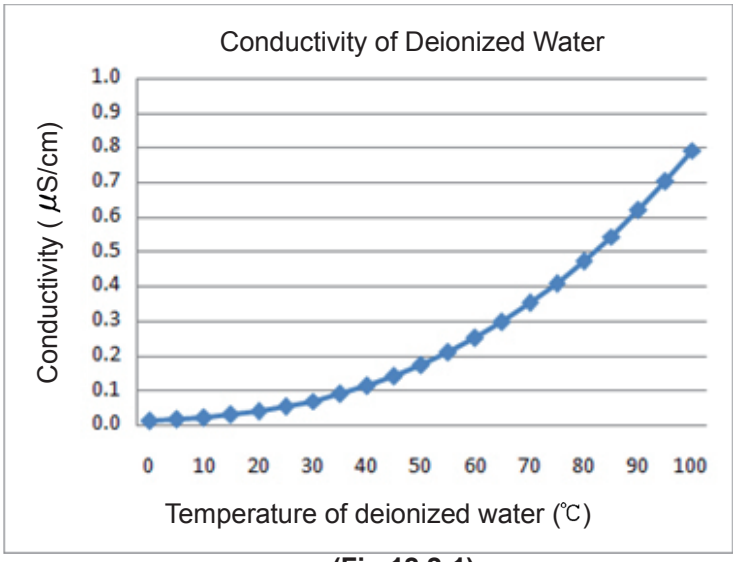

(Fig.12.2-1)

Conductivity Caused by Ionic Impurities

Conductivity caused by ionic impurities can be calculated using temperature coefficient 2 %/℃ in Section 12.1. (p.66)

13. Character Tables

The following shows our character tables. Use data column for your reference.

13.1 Setting Group List

Character	Setting Group	Reference Section
F.Nc. 1	Resistivity Input Group	Section 13.7 (p.70)
F.Nc.2	Temperature Input Group	Section 13.8 (p.71)
EVT.a.1	EVT1 Action Group	Section 13.9 (pp.72 to 74)
EVT.a2	EVT2 Action Group	Section 13.10 (pp.75 to 77)
EVT.a3	EVT3 Action Group	Section 13.11 (pp. 78 to 80)
EVT.a4	EVT4 Action Group	Section 13.12 (pp.81 to 83)
a.T.E.R	Basic Function Group	Section 13.13 (pp. 84 to 87)

13.2 Temperature Calibration Mode

Character	Setting Item, Setting Range	Factory Default	Data
to (*) 0.0	**Temperature calibration value** -10.0 to 10.0℃	0.0℃	

(*) to and measured value are displayed alternately.

13.3 Resistivity Calibration Span Adjustment

Character	Setting Item, Setting Range	Factory Default	Data
AdJ4 (*) 1.000	**Span adjustment value** 0.700 to 1.300	1.000	

(*) AdJ4 and measured value are displayed alternately.

13.4 Transmission Output 1 Adjustment Mode

Character	Setting Item, Setting Range	Factory Default	Data
AJZ 1 0.00	**Transmission output 1 Zero adjustment value** ±5.00% of Transmission output 1 span	0.00%	
AJ4 1 0.00	**Transmission output 1 Span adjustment value** ±5.00% of Transmission output 1 span	0.00%	

13.5 Transmission Output 2 Adjustment Mode

Character	Setting Item, Setting Range	Factory Default	Data
AJZ2 0.00	**Transmission output 2 Zero adjustment value** ±5.00% of Transmission output 2 span	0.00%	
AJ42 0.00	**Transmission output 2 Span adjustment value** ±5.00% of Transmission output 2 span	0.00%	

13.6 Simple Setting Mode

Character	Setting Item, Setting Range	Factory Default	Data
EV1 1 0.00	**EVT1 value** (*1)	Resistivity input: Measurement range low limit Temperature input: 0.0℃	
	Resistivity input: Measurement range low limit to Measurement range high limit (*5) Temperature input: 0.0 to 100.0℃ (*6)		
EV2 2 0.00	**EVT2 value** (*2)	Resistivity input: Measurement range low limit Temperature input: 0.0℃	
	Resistivity input: Measurement range low limit to Measurement range high limit (*5) Temperature input: 0.0 to 100.0℃ (*6)		
EV3 3 0.00	**EVT3 value** (*3)	Resistivity input: Measurement range low limit Temperature input: 0.0℃	
	Resistivity input: Measurement range low limit to Measurement range high limit (*5) Temperature input: 0.0 to 100.0℃ (*6)		
EV4 4 0.00	**EVT4 value** (*4)	Resistivity input: Measurement range low limit Temperature input: 0.0℃	
	Resistivity input: Measurement range low limit to Measurement range high limit (*5) Temperature input: 0.0 to 100.0℃ (*6)		

(*1) Not available if ----- (No action), EROUT (Error output) or FAIL (Fail output) is selected in [EVT1 type].
(*2) Not available if ----- (No action), EROUT (Error output) or FAIL (Fail output) is selected in [EVT2 type].
(*3) Not available if ----- (No action), EROUT (Error output) or FAIL (Fail output) is selected in [EVT3 type].
Available only when EVT3, EVT4 outputs (EVT3 option) are/is ordered.
(*4) Not available if ----- (No action), EROUT (Error output) or FAIL (Fail output) is selected in [EVT4 type].
Available only when EVT3, EVT4 outputs (EVT3 option) is ordered.
(*5) The measurement unit and decimal point place follow the measurement range.
(*6) The decimal point place does not follow the selection. It is fixed.

13.7 Resistivity Input Group

Character	Setting Item, Setting Range	Factory Default	Data
cELL 0.01	**Sensor cell constant** 0.01/cm fixed.	0.01/cm	
coEF 1.000	**Cell constant correction value** Setting range: 0.001 to 5.000	1.000	
UNIT coNV	**Measurement unit** coNV : Resistivity (MΩ•cm) hI : Resistivity (kΩ•m)	Resistivity (MΩ•cm)	
MRNG 20.00	**Measurement range** See (Table 13.7-1).	20.00 MΩ•cm	
PURE 18.18	**Ultrapure water value** See (Table 13.7-2).	18.18	
cLIP 18.18	**Clip value** Setting range: 0.00 to Measurement range high limit value, or Selected ultrapure water value	18.18 MΩ•cm	
FIT1 0.0	**Resistivity input filter time constant** Setting range: 0.0 to 10.0 seconds	0.0 seconds	
hoS 0.00	**Resistivity input sensor correction** Setting range: ±10% of measurement span (*)	0.00 MΩ•cm	
dFcT 20	**Resistivity inputs for moving average** Setting range: 1 to 120	20	

(*) The unit and decimal point place follow the measurement range.

(Table 13.7-1)

Measurement Unit	Selection Item	Measurement Range
Resistivity (MΩ•cm)	0.200	0.000 to 0.200 MΩ•cm
	2.00	0.00 to 2.00 MΩ•cm
	20.00	0.00 to 20.00 MΩ•cm
	100.0	0.0 to 100.0 MΩ•cm
Resistivity (kΩ•m)	2.00	0.00 to 2.00 kΩ•m
	20.0	0.0 to 20.0 kΩ•m
	200.0	0.0 to 200.0 kΩ•m
	1000	0 to 1000 kΩ•m

(Table 13.7-2)

Measurement Unit	Selection Item	Ultrapure Water Value
Resistivity (MΩ•cm)	18.18	18.18
	18.23	18.23
	18.24	18.24
Resistivity (kΩ•m)	181.8	181.8
	182.3	182.3
	182.4	182.4

13.8 Temperature Input Group

Character	Setting Item, Setting Range	Factory Default	Data
rcM□□ PURE□	**Temperature compensation method**	Temperature characteristics of deionized water	
	• Selects Temperature compensation calculation method. • PURE□: Temperature compensation is conducted using temperature characteristics of deionized water. PUSr□: Temperature compensation is conducted using temperature characteristics of deionized water and impure substance. rcoE□: Temperature compensation is conducted using temperature coefficient (%/℃) and randomly selected reference temperature. oFF□□: No temperature compensation		
KcoE□ □□2.00	**Temperature coefficient** (*1) Setting range: -5.00 to 5.00 %/℃	2.00 %/℃	
SrNd□ □□25.0	**Reference temperature** Setting range: 5.0 to 95.0℃	25.0℃	
dP2□□ □□□0.0	**Decimal point place** □□□□0 : No decimal point □□□0.0 : 1 digit after decimal point	1 digit after decimal point	
cNEcr 3WI RE	**Pt100 input wire type** 2WI RE : 2-wire type 3WI RE : 3-wire type	3-wire type	
cAbLE □□□0.0	**Cable length correction** (*2) Setting range: 0.0 to 100.0 m	0.0 m	
cSEc□ □□0.30	**Cable cross-section area** (*2) Setting range: 0.10 to 2.00 mm^2	0.30 mm^2	
FIr2□ □□□0.0	**Temperature input filter time constant** Setting range: 0.0 to 10.0 seconds	0.0 seconds	
dFcr□ □□□20	**Temperature inputs for moving average** Setting range: 1 to 120	20	

(*1) Not available if PURE□ [Temperature characteristics of deionized water] or oFF□□ (No temperature compensation) is selected in [Temperature compensation method].

(*2) Not available if 3WI RE (3-wire type) is selected in [Pt100 input wire type].

13.9 EVT1 Action Group

Character	Setting Item, Setting Range	Factory Default	Data
EVT 1F -----	**EVT1 type** -----: No action SE_L□: Resistivity input low limit action SE_H□: Resistivity input high limit action TEMPL: Temperature input low limit action TEMPH: Temperature input high limit action ERoUT: Error output FAIL□: Fail output SEUL□: Resistivity input error alarm output SE_HL: Resistivity input High/Low limits independent action TEMHL: Temperature input High/Low limits independent action	No action	
EV1□ □□0.00	**EVT1 value** (*1) Resistivity input: Measurement range low limit to Measurement range high limit (*2) Temperature input: 0.0 to 100.0℃ (*3)	Resistivity input: Measurement range low limit Temperature input: 0.0℃	
EP1□□ □□0.00	**EVT1 proportional band** (*4), (*5) Resistivity input: Measurement range low limit to Measurement range high limit (*2) Temperature input: 0.0 to 100.0℃ (*3)	Resistivity input: Measurement range low limit Temperature input: 0.0℃	
E1RST □□0.00	**EVT1 reset** (*4), (*6) Resistivity input: ±Measurement span (*2) Temperature input: ±100.0℃ (*3)	Resistivity input: 0.00 MΩ•cm Temperature input: 0.0℃	
E1dlF Sdl F□	**EVT1 hysteresis type** (*4), (*7) cdl F□: Medium Value Sdl F□: Reference Value	Reference Value	
E1dFo □□0.10	**EVT1 ON side** (*4), (*7) Resistivity input: 0.00 to 20% of Measurement range high limit (*2) Temperature input : 0.0 to 10.0℃ (*3)	Resistivity input: 0.10 MΩ•cm Temperature input: 1.0℃	

(*1) Not available if -----(No action), ERoUT (Error output), FAIL□ (Fail output) or SEUL□ (Resistivity input error alarm output) is selected in [EVT1 type].

(*2) The measurement unit and decimal point place follow the measurement range.

(*3) The decimal point place does not follow the selection. It is fixed.

(*4) Available when SE_L□ (Resistivity input low limit action), SE_H□ (Resistivity input high limit action), TEMPL (Temperature input low limit action) or TEMPH (Temperature input high limit action) is selected in [EVT1 type].

(*5) ON/OFF control action when set to 0.00 or 0.0.

(*6) Not available for ON/OFF control action.

(*7) Not available for P control action.

Character	Setting Item, Setting Range	Factory Default	Data
E 1dFU □□0.10	**EVT1 OFF side** (*1), (*2), (*3) Resistivity input: 0.00 to 20% of Measurement range high limit (*4) Temperature input : 0.0 to 10.0℃ (*5)	Resistivity input: 0.10 MΩ•cm Temperature input: 1.0℃	
E 1oNT □□□□0	**EVT1 ON delay time** (*2), (*6) Setting range: 0 to 10000 seconds	0 seconds	
E 1oFT □□□□0	**EVT1 OFF delay time** (*2), (*6) Setting range: 0 to 10000 seconds	0 seconds	
E 1c□□ □□□30	**EVT1 proportional cycle** (*1), (*7) Setting range: 1 to 300 seconds	30 seconds	
E 1oLH □□ 100	**EVT1 output high limit** (*1), (*7) Setting range: EVT1 output low limit to 100%	100%	
E 1oLL □□□□0	**EVT1 output low limit** (*1), (*7) Setting range: 0% to EVT1 output high limit	0%	
ooNT 1 □□□□0	**Output ON time when EVT1 output ON** (*1), (*2) Setting range: 0 to 10000 seconds	0 seconds	
ooFT 1 □□□□0	**Output OFF time when EVT1 output ON** (*1), (*2) Setting range: 0 to 10000 seconds	0 seconds	
E 1c5□ ------	**EVT1 resistivity input error alarm EVT□ type** (*8) ------ : No action EVT2□ : EVT2 type EVT3□ : EVT3 type EVT4□ : EVT4 type	No action	
E 15o□ □□0.00	**EVT1 resistivity input error alarm band when EVT□ output ON** (*8) Setting range: Measurement range low limit to Measurement range high limit (*4)	Measurement range low limit	

(*1) Available when 5E_L□ (Resistivity input low limit action), 5E_H□ (Resistivity input high limit action), TEMPL (Temperature input low limit action) or TEMPH (Temperature input high limit action) is selected in [EVT1 type].

(*2) Not available for P control action.

(*3) Not available if cdl F□ (Medium Value) is selected in [EVT1 hysteresis type].

(*4) The measurement unit and decimal point place follow the measurement range.

(*5) The decimal point place does not follow the selection. It is fixed.

(*6) Not available if ------ (No action), EROUT (Error output), FAIL□ (Fail output) or 5EUL□ (Resistivity input error alarm output) is selected in [EVT1 type].

(*7) Not available for ON/OFF control action.

(*8) Available only when 5EUL□ (Resistivity input error alarm output) is selected in [EVT1 type].

Character	Setting Item, Setting Range	Factory Default	Data
E1toT □□□□0	**EVT1 resistivity input error alarm time when EVT□ output ON** (*1) Setting range: 0 to 10000 seconds or minutes (*2)	0 seconds	
E1tc□ □□0.00	**EVT1 resistivity input error alarm band when EVT□ output OFF** (*1) Setting range: Measurement range low limit to Measurement range high limit (*3)	Measurement range low limit	
E1tcT □□□□0	**EVT1 resistivity input error alarm time when EVT□ output OFF** (*1) Setting range: 0 to 10000 seconds or minutes (*2)	0 seconds	
MVZN1 □□50.0	**EVT1 cycle variable range** (*4), (*5) Setting range: 1.0 to 100.0%	50.0%	
cENT1 □□□□0	**EVT1 cycle extended time** (*4), (*5) Setting range: 0 to 300 seconds	0 seconds	
E1_L□ □□0.00	**EVT1 High/Low limits independent lower side value** (*6) Resistivity input: Measurement range low limit to Measurement range high limit (*3) Temperature input: 0.0 to 100.0℃ (*7)	Resistivity input: Measurement range low limit Temperature input: 0.0℃	
E1_H□ □□0.00	**EVT1 High/Low limits independent upper side value** (*6) Resistivity input: Measurement range low limit to Measurement range high limit (*3) Temperature input: 0.0 to 100.0℃ (*7)	Resistivity input: Measurement range low limit Temperature input: 0.0℃	
E1_HY □□0.01	**EVT1 hysteresis** (*6) Resistivity input: 0.01 to 20% of Measurement range high limit (*3) Temperature input: 0.1 to 10.0℃ (*7)	Resistivity input: 0.01 MΩ•cm Temperature input: 1.0℃	

(*1) Available only when SEUL□ (Resistivity input error alarm output) is selected in [EVT1 type].

(*2) Time unit follows the selection in [Resistivity input error alarm time unit].

(*3) The measurement unit and decimal point place follow the measurement range.

(*4) Available when SE_L□ (Resistivity input low limit action), SE_H□ (Resistivity input high limit action), TEMPL (Temperature input low limit action) or TEMPH (Temperature input high limit action) is selected in [EVT1 type].

(*5) Not available for ON/OFF control action.

(*6) Available when SE_HL (Resistivity input High/Low limits independent action) or TEMHL (Temperature input High/Low limits independent action) is selected in [EVT1 type].

(*7) The decimal point place does not follow the selection. It is fixed.

13.10 EVT2 Action Group

Character	Setting Item, Setting Range	Factory Default	Data
EVT2F -----	**EVT2 type** ----- : No action SE_L□ : Resistivity input low limit action SE_H□ : Resistivity input high limit action TEMPL : Temperature input low limit action TEMPH : Temperature input high limit action ERROR : Error output FAIL□ : Fail output SEUL□ : Resistivity input error alarm output SE_HL : Resistivity input High/Low limits independent action TEMHL : Temperature input High/Low limits independent action	No action	
E5V2□ □□0.00	**EVT2 value** (*1) Resistivity input: Measurement range low limit to Measurement range high limit (*2) Temperature input: 0.0 to 100.0℃ (*3)	Resistivity input: Measurement range low limit Temperature input: 0.0℃	
EP2□□ □□0.00	**EVT2 proportional band** (*4), (*5) Resistivity input: Measurement range low limit to Measurement range high limit (*2) Temperature input: 0.0 to 100.0℃ (*3)	Resistivity input: Measurement range low limit Temperature input: 0.0℃	
E2RST □□0.00	**EVT2 reset** (*4), (*6) Resistivity input: ±Measurement span (*2) Temperature input: ±100.0℃ (*3)	Resistivity input: 0.00 MΩ•cm Temperature input: 0.0℃	
E2dIF SdIF□	**EVT2 hysteresis type** (*4), (*7) cdIF□: Medium Value SdIF□: Reference Value	Reference Value	
E2dFo □□0.10	**EVT2 ON side** (*4), (*7) Resistivity input: 0.00 to 20% of Measurement range high limit (*2) Temperature input : 0.0 to 10.0℃ (*3)	Resistivity input: 0.10 MΩ•cm Temperature input: 1.0℃	

(*1) Not available if ----- (No action), ERROR (Error output), FAIL□ (Fail output) or SEUL□ (Resistivity input error alarm output) is selected in [EVT2 type].

(*2) The measurement unit and decimal point place follow the measurement range.

(*3) The decimal point place does not follow the selection. It is fixed.

(*4) Available when SE_L□ (Resistivity input low limit action), SE_H□ (Resistivity input high limit action), TEMPL (Temperature input low limit action) or TEMPH (Temperature input high limit action) is selected in [EVT2 type].

(*5) ON/OFF control action when set to 0.00 or 0.0.

(*6) Not available for ON/OFF control action.

(*7) Not available for P control action.

Character	Setting Item, Setting Range	Factory Default	Data
E2dFU □□0.10	**EVT2 OFF side** (*1), (*2), (*3) Resistivity input: 0.00 to 20% of Measurement range high limit (*4) Temperature input : 0.0 to 10.0℃ (*5)	Resistivity input: 0.10 MΩ•cm Temperature input: 1.0℃	
E2oNT □□□□0	**EVT2 ON delay time** (*2), (*6) Setting range: 0 to 10000 seconds	0 seconds	
E2oFT □□□□0	**EVT2 OFF delay time** (*2), (*6) Setting range: 0 to 10000 seconds	0 seconds	
E2c□□ □□□30	**EVT2 proportional cycle** (*1), (*7) Setting range: 1 to 300 seconds	30 seconds	
E2oLH □□ 100	**EVT2 output high limit** (*1), (*7) Setting range: EVT2 output low limit to 100%	100%	
E2oLL □□□□0	**EVT2 output low limit** (*1), (*7) Setting range: 0% to EVT2 output high limit	0%	
ooNT2 □□□□0	**Output ON time when EVT2 output ON** (*1), (*2) Setting range: 0 to 10000 seconds	0 seconds	
ooFT2 □□□□0	**Output OFF time when EVT2 output ON** (*1), (*2) Setting range: 0 to 10000 seconds	0 seconds	
E2c5□ ------	**EVT2 resistivity input error alarm EVT□ type** (*8) ------ : EVT1 type EVT2□ : No action EVT3□ : EVT3 type EVT4□ : EVT4 type	No action	
E25o□ □□0.00	**EVT2 resistivity input error alarm band when EVT□ output ON** (*8) Setting range: Measurement range low limit to Measurement range high limit (*4)	Measurement range low limit	

(*1) Available when rE_L□ (Resistivity input low limit action), rE_H□ (Resistivity input high limit action), rEMPL (Temperature input low limit action) or rEMPH (Temperature input high limit action) is selected in [EVT2 type].

(*2) Not available for P control action.

(*3) Not available if cdi F□ (Medium Value) is selected in [EVT2 hysteresis type].

(*4) The measurement unit and decimal point place follow the measurement range.

(*5) The decimal point place does not follow the selection. It is fixed.

(*6) Not available if ------ (No action), ERoUT (Error output), FAIL□ (Fail output) or rEUL□ (Resistivity input error alarm output) is selected in [EVT2 type].

(*7) Not available for ON/OFF control action.

(*8) Available only when rEUL□ (Resistivity input error alarm output) is selected in [EVT2 type].

Character	Setting Item, Setting Range	Factory Default	Data
E2toT □□□□0	**EVT2 resistivity input error alarm time when EVT□ output ON** (*1) Setting range: 0 to 10000 seconds or minutes (*2)	0 seconds	
E2tc□ □□0.00	**EVT2 resistivity input error alarm band when EVT□ output OFF** (*1) Setting range: Measurement range low limit to Measurement range high limit (*3)	Measurement range low limit	
E2tcT □□□□0	**EVT2 resistivity input error alarm time when EVT□ output OFF** (*1) Setting range: 0 to 10000 seconds or minutes (*2)	0 seconds	
MVZN2 □□50.0	**EVT2 cycle variable range** (*4), (*5) Setting range: 1.0 to 100.0%	50.0%	
cENT2 □□□□0	**EVT2 cycle extended time** (*4), (*5) Setting range: 0 to 300 seconds	0 seconds	
E2_L□ □□0.00	**EVT2 High/Low limits independent lower side value** (*6) Resistivity input: Measurement range low limit to Measurement range high limit (*3) Temperature input: 0.0 to 100.0℃ (*7)	Resistivity input: Measurement range low limit Temperature input: 0.0℃	
E2_H□ □□0.00	**EVT2 High/Low limits independent upper side value** (*6) Resistivity input: Measurement range low limit to Measurement range high limit (*3) Temperature input: 0.0 to 100.0℃ (*7)	Resistivity input: Measurement range low limit Temperature input: 0.0℃	
E2_HY □□0.01	**EVT2 hysteresis** (*6) Resistivity input: 0.01 to 20% of Measurement range high limit (*3) Temperature input: 0.1 to 10.0℃ (*7)	Resistivity input: 0.01 MΩ•cm Temperature input: 1.0℃	

(*1) Available only when SEUL□ (Resistivity input error alarm output) is selected in [EVT2 type].

(*2) Time unit follows the selection in [Resistivity input error alarm time unit].

(*3) The measurement unit and decimal point place follow the measurement range.

(*4) Available when SE_L□ (Resistivity input low limit action), SE_H□ (Resistivity input high limit action), TEMPL (Temperature input low limit action) or TEMPH (Temperature input high limit action) is selected in [EVT2 type].

(*5) Not available for ON/OFF control action.

(*6) Available when SE_HL (Resistivity input High/Low limits independent action) or TEMHL (Temperature input High/Low limits independent action) is selected in [EVT2 type].

(*7) The decimal point place does not follow the selection. It is fixed.

13.11 EVT3 Action Group

Character	Setting Item, Setting Range	Factory Default	Data
EVT3F ------	**EVT3 type** ------ : No action SE_L□ : Resistivity input low limit action SE_H□ : Resistivity input high limit action TEMPL : Temperature input low limit action TEMPH : Temperature input high limit action ERoUT : Error output FAIL□ : Fail output SEUL□ : Resistivity input error alarm output SE_HL : Resistivity input High/Low limits independent action TEMHL : Temperature input High/Low limits independent action	No action	
EV3□ □□0.00	**EVT3 value** (*1) Resistivity input: Measurement range low limit to Measurement range high limit (*2) Temperature input: 0.0 to 100.0℃ (*3)	Resistivity input: Measurement range low limit Temperature input: 0.0℃	
EP3□□ □□0.00	**EVT3 proportional band** (*4), (*5) Resistivity input: Measurement range low limit to Measurement range high limit (*2) Temperature input: 0.0 to 100.0℃ (*3)	Resistivity input: Measurement range low limit Temperature input: 0.0℃	
E3RST □□0.00	**EVT3 reset** (*4), (*6) Resistivity input: ±Measurement span (*2) Temperature input: ±100.0℃ (*3)	Resistivity input: 0.00 MΩ•cm Temperature input: 0.0℃	
E3dIF SdIF□	**EVT3 hysteresis type** (*4), (*7) cdIF□: Medium Value SdIF□: Reference Value	Reference Value	
E3dFo □□0.10	**EVT3 ON side** (*4), (*7) Resistivity input: 0.00 to 20% of Measurement range high limit (*2) Temperature input : 0.0 to 10.0℃ (*3)	Resistivity input: 0.10 MΩ•cm Temperature input: 1.0℃	

(*1) Not available if ------ (No action), ERoUT (Error output), FAIL□ (Fail output) or SEUL□ (Resistivity input error alarm output) is selected in [EVT3 type].

(*2) The measurement unit and decimal point place follow the measurement range.

(*3) The decimal point place does not follow the selection. It is fixed.

(*4) Available when SE_L□ (Resistivity input low limit action), SE_H□ (Resistivity input high limit action), TEMPL (Temperature input low limit action) or TEMPH (Temperature input high limit action) is selected in [EVT3 type].

(*5) ON/OFF control action when set to 0.00 or 0.0.

(*6) Not available for ON/OFF control action.

(*7) Not available for P control action.

Character	Setting Item, Setting Range	Factory Default	Data
E3dFU □□0.10	**EVT3 OFF side** (*1), (*2), (*3) Resistivity input: 0.00 to 20% of Measurement range high limit (*4) Temperature input : 0.0 to 10.0℃ (*5)	Resistivity input: 0.10 MΩ•cm Temperature input: 1.0℃	
E3oNT □□□□0	**EVT3 ON delay time** (*2), (*6) Setting range: 0 to 10000 seconds	0 seconds	
E3oFT □□□□0	**EVT3 OFF delay time** (*2), (*6) Setting range: 0 to 10000 seconds	0 seconds	
E3c□□ □□□30	**EVT3 proportional cycle** (*1), (*7) Setting range: 1 to 300 seconds	30 seconds	
E3oLH □□ 100	**EVT3 output high limit** (*1), (*7) Setting range: EVT3 output low limit to 100%	100%	
E3oLL □□□□0	**EVT3 output low limit** (*1), (*7) Setting range: 0% to EVT3 output high limit	0%	
ooNT3 □□□□0	**Output ON time when EVT3 output ON** (*1), (*2) Setting range: 0 to 10000 seconds	0 seconds	
ooFT3 □□□□0	**Output OFF time when EVT3 output ON** (*1), (*2) Setting range: 0 to 10000 seconds	0 seconds	
E3c5□ ------	**EVT3 resistivity input error alarm EVT□ type** (*8) ------ : EVT1 type EVT2□ : EVT2 type EVT3□ : No action EVT4□ : EVT4 type	No action	
E35o□ □□0.00	**EVT3 resistivity input error alarm band when EVT□ output ON** (*8) Setting range: Measurement range low limit to Measurement range high limit (*4)	Measurement range low limit	

(*1) Available when 5E_L□ (Resistivity input low limit action), 5E_H□ (Resistivity input high limit action), TEMPL (Temperature input low limit action) or TEMPH (Temperature input high limit action) is selected in [EVT3 type].

(*2) Not available for P control action.

(*3) Not available if cdl F□ (Medium Value) is selected in [EVT3 hysteresis type].

(*4) The measurement unit and decimal point place follow the measurement range.

(*5) The decimal point place does not follow the selection. It is fixed.

(*6) Not available if ------ (No action), ERoUT (Error output), FAIL□ (Fail output) or 5EUL□ (Resistivity input error alarm output) is selected in [EVT3 type].

(*7) Not available for ON/OFF control action.

(*8) Available only when 5EUL□ (Resistivity input error alarm output) is selected in [EVT3 type].

Character	Setting Item, Setting Range	Factory Default	Data
E3oT □□□□0	**EVT3 resistivity input error alarm time when EVT□ output ON** (*1) Setting range: 0 to 10000 seconds or minutes (*2)	0 seconds	
E3c□ □□0.00	**EVT3 resistivity input error alarm band when EVT□ output OFF** (*1) Setting range: Measurement range low limit to Measurement range high limit (*3)	Measurement range low limit	
E3cT □□□□0	**EVT3 resistivity input error alarm time when EVT□ output OFF** (*1) Setting range: 0 to 10000 seconds or minutes (*2)	0 seconds	
MVZN3 □□50.0	**EVT3 cycle variable range** (*4), (*5) Setting range: 1.0 to 100.0%	50.0%	
cENT3 □□□□0	**EVT3 cycle extended time** (*4), (*5) Setting range: 0 to 300 seconds	0 seconds	
E3_L□ □□0.00	**EVT3 High/Low limits independent lower side value** (*6) Resistivity input: Measurement range low limit to Measurement range high limit (*3) Temperature input: 0.0 to 100.0℃ (*7)	Resistivity input: Measurement range low limit Temperature input: 0.0℃	
E3_H□ □□0.00	**EVT3 High/Low limits independent upper side value** (*6) Resistivity input: Measurement range low limit to Measurement range high limit (*3) Temperature input: 0.0 to 100.0℃ (*7)	Resistivity input: Measurement range low limit Temperature input: 0.0℃	
E3_HY □□0.01	**EVT3 hysteresis** (*6) Resistivity input: 0.01 to 20% of Measurement range high limit (*3) Temperature input: 0.1 to 10.0℃ (*7)	Resistivity input: 0.01 MΩ•cm Temperature input: 1.0℃	

(*1) Available only when rEVL□ (Resistivity input error alarm output) is selected in [EVT3 type].

(*2) Time unit follows the selection in [Resistivity input error alarm time unit].

(*3) The measurement unit and decimal point place follow the measurement range.

(*4) Available when rE_L□ (Resistivity input low limit action), rE_H□ (Resistivity input high limit action), rEMPL (Temperature input low limit action) or rEMPH (Temperature input high limit action) is selected in [EVT3 type].

(*5) Not available for ON/OFF control action.

(*6) Available when rE_HL (Resistivity input High/Low limits independent action) or rEMHL (Temperature input High/Low limits independent action) is selected in [EVT3 type].

(*7) The decimal point place does not follow the selection. It is fixed.

13.12 EVT4 Action Group

Character	Setting Item, Setting Range	Factory Default	Data
EVT4F ------	**EVT4 type** ------ : No action SE_L□ : Resistivity input low limit action SE_H□ : Resistivity input high limit action TEMPL : Temperature input low limit action TEMPH : Temperature input high limit action ERoUT : Error output FAIL□ : Fail output SEUL□ : Resistivity input error alarm output SE_HL : Resistivity input High/Low limits independent action TEMHL : Temperature input High/Low limits independent action	No action	
EV4□ □□0.00	**EVT4 value** (*1) Resistivity input: Measurement range low limit to Measurement range high limit (*2) Temperature input: 0.0 to 100.0℃ (*3)	Resistivity input: Measurement range low limit Temperature input: 0.0℃	
EP4□□ □□0.00	**EVT4 proportional band** (*4), (*5) Resistivity input: Measurement range low limit to Measurement range high limit (*2) Temperature input: 0.0 to 100.0℃ (*3)	Resistivity input: Measurement range low limit Temperature input: 0.0℃	
E4RST □□0.00	**EVT4 reset** (*4), (*6) Resistivity input: ±Measurement span (*2) Temperature input: ±100.0℃ (*3)	Resistivity input: 0.00 MΩ•cm Temperature input: 0.0℃	
E4dIF SdIF□	**EVT4 hysteresis type** (*4), (*7) cdIF□: Medium Value SdIF□: Reference Value	Reference Value	
E4dFo □□0.10	**EVT4 ON side** (*4), (*7) Resistivity input: 0.00 to 20% of Measurement range high limit (*2) Temperature input : 0.0 to 10.0℃ (*3)	Resistivity input: 0.10 MΩ•cm Temperature input: 1.0℃	

(*1) Not available if ------ (No action), ERoUT (Error output), FAIL□ (Fail output) or SEUL□ (Resistivity input error alarm output) is selected in [EVT4 type].

(*2) The measurement unit and decimal point place follow the measurement range.

(*3) The decimal point place does not follow the selection. It is fixed.

(*4) Available when SE_L□ (Resistivity input low limit action), SE_H□ (Resistivity input high limit action), TEMPL (Temperature input low limit action) or TEMPH (Temperature input high limit action) is selected in [EVT4 type].

(*5) ON/OFF control action when set to 0.00 or 0.0.

(*6) Not available for ON/OFF control action.

(*7) Not available for P control action.

Character	Setting Item, Setting Range	Factory Default	Data
E4dFU □□0.10	**EVT4 OFF side** (*1), (*2), (*3) Resistivity input: 0.00 to 20% of Measurement range high limit (*4) Temperature input : 0.0 to 10.0℃ (*5)	Resistivity input: 0.10 MΩ•cm Temperature input: 1.0℃	
E4oNT □□□□0	**EVT4 ON delay time** (*2), (*6) Setting range: 0 to 10000 seconds	0 seconds	
E4oFT □□□□0	**EVT4 OFF delay time** (*2), (*6) Setting range: 0 to 10000 seconds	0 seconds	
E4c□□ □□□30	**EVT4 proportional cycle** (*1), (*7) Setting range: 1 to 300 seconds	30 seconds	
E4oLH □□100	**EVT4 output high limit** (*1), (*7) Setting range: EVT4 output low limit to 100%	100%	
E4oLL □□□□0	**EVT4 output low limit** (*1), (*7) Setting range: 0% to EVT4 output high limit	0%	
ooNT4 □□□□0	**Output ON time when EVT4 output ON** (*1), (*2) Setting range: 0 to 10000 seconds	0 seconds	
ooFT4 □□□□0	**Output OFF time when EVT4 output ON** (*1), (*2) Setting range: 0 to 10000 seconds	0 seconds	
E4c4□ --------	**EVT4 resistivity input error alarm EVT□ type** (*8) -------- : EVT1 type EVT2□ : EVT2 type EVT3□ : EVT3 type EVT4□ : No action	No action	
E4HoH□ □□0.00	**EVT4 resistivity input error alarm band when EVT□ output ON** (*8) Setting range: Measurement range low limit to Measurement range high limit (*4)	Measurement range low limit	

(*1) Available when HE_L□ (Resistivity input low limit action), HE_H□ (Resistivity input high limit action), TEMPL (Temperature input low limit action) or TEMPH (Temperature input high limit action) is selected in [EVT4 type].

(*2) Not available for P control action.

(*3) Not available if cdiF□ (Medium Value) is selected in [EVT4 hysteresis type].

(*4) The measurement unit and decimal point place follow the measurement range.

(*5) The decimal point place does not follow the selection. It is fixed.

(*6) Not available if -------- (No action), EROUT (Error output), FAIL□ (Fail output) or HEUL□ (Resistivity input error alarm output) is selected in [EVT4 type].

(*7) Not available for ON/OFF control action.

(*8) Available only when HEUL□ (Resistivity input error alarm output) is selected in [EVT4 type].

Character	Setting Item, Setting Range	Factory Default	Data
E4oT □□□□0	**EVT4 resistivity input error alarm time when EVT□ output ON** (*1) Setting range: 0 to 10000 seconds or minutes (*2)	0 seconds	
E4oC□ □□0.00	**EVT4 resistivity input error alarm band when EVT□ output OFF** (*1) Setting range: Measurement range low limit to Measurement range high limit (*3)	Measurement range low limit	
E4cT □□□□0	**EVT4 resistivity input error alarm time when EVT□ output OFF** (*1) Setting range: 0 to 10000 seconds or minutes (*2)	0 seconds	
MVZN4 □□50.0	**EVT4 cycle variable range** (*4), (*5) Setting range: 1.0 to 100.0%	50.0%	
cENT4 □□□□0	**EVT4 cycle extended time** (*4), (*5) Setting range: 0 to 300 seconds	0 seconds	
E4_L□ □□0.00	**EVT4 High/Low limits independent lower side value** (*6) Resistivity input: Measurement range low limit to Measurement range high limit (*3) Temperature input: 0.0 to 100.0℃(*7)	Resistivity input: Measurement range low limit Temperature input: 0.0℃	
E4_H□ □□0.00	**EVT4 High/Low limits independent upper side value** (*6) Resistivity input: Measurement range low limit to Measurement range high limit (*3) Temperature input: 0.0 to 100.0℃ (*7)	Resistivity input: Measurement range low limit Temperature input: 0.0℃	
E4_HY □□0.01	**EVT4 hysteresis** (*6) Resistivity input: 0.01 to 20% of Measurement range high limit (*3) Temperature input: 0.1 to 10.0℃ (*7)	Resistivity input: 0.01 MΩ•cm Temperature input: 1.0℃	

(*1) Available only when rEUL□ (Resistivity input error alarm output) is selected in [EVT4 type].

(*2) Time unit follows the selection in [Resistivity input error alarm time unit].

(*3) The measurement unit and decimal point place follow the measurement range.

(*4) Available when rE_L□ (Resistivity input low limit action), rE_H□ (Resistivity input high limit action), rEMPL (Temperature input low limit action) or rEMPH (Temperature input high limit action) is selected in [EVT4 type].

(*5) Not available for ON/OFF control action.

(*6) Available when rE_HL (Resistivity input High/Low limits independent action) or rEMHL (Temperature input High/Low limits independent action) is selected in [EVT4 type].

(*7) The decimal point place does not follow the selection. It is fixed.

13.13 Basic Function Group

Character	Setting Item, Setting Range	Factory Default	Data
LocK -----	**Set value lock** -----: Unlock Lock 1: Lock 1 Lock2: Lock 2 Lock3: Lock 3	Unlock	
cMbL NoML	**Communication protocol** (*1) NoML: Shinko protocol ModA: MODBUS ASCII mode ModR: MODBUS RTU mode	Shinko protocol	
cMNo 0000	**Instrument number** (*1) 0 to 95	0	
cMbP 0096	**Communication speed** (*1) 0096: 9600 bps 0192: 19200 bps 0384: 38400 bps	9600 bps	
cMFT 7EvN	**Data bit/Parity** (*1) 8NoN: 8 bits/No parity 7NoN: 7 bits/No parity 8EvN: 8 bits/Even 7EvN: 7 bits/Even 8odd: 8 bits/Odd 7odd: 7 bits/Odd	7 bits/Even	
cMbT 0001	**Stop bit** (*1) 0001: 1 bit 0002: 2 bits	1 bit	
rRo1 bE00	**Transmission output 1 type** bE000: Resistivity transmission rEMP0: Temperature transmission Mv 100: EVT1 MV transmission (*4) Mv200: EVT2 MV transmission Mv300: EVT3 MV transmission (*5) Mv400: EVT4 MV transmission (*5)	Resistivity transmission	
rRH1 0200	**Transmission output 1 high limit** Resistivity transmission: Transmission output 1 low limit to Measurement range high limit (*2) Temperature transmission: Transmission output 1 low limit to 100.0℃ (*3) MV transmission: Transmission output 1 low limit to 100.0%	Resistivity transmission: Measurement range high limit Temperature transmission: 100.0℃ MV transmission: 100.0%	

(*1) Available when Serial communication (C5 option) is ordered.
(*2) The measurement unit and decimal point place follow the measurement range.
(*3) The decimal point place does not follow the selection. It is fixed.
(*4) Not available when Transmission output 2 (TA2 option) is ordered.
(*5) Available when EVT3, EVT4 outputs (EVT3 option) are/is ordered.

Character	Setting Item, Setting Range	Factory Default	Data
TRLL1 □□0.00	**Transmission output 1 low limit** Resistivity transmission: Measurement range low limit to Transmission output 1 high limit (*1) Temperature transmission: 0.0℃ to Transmission output 1 high limit (*2) MV transmission: 0.0% to Transmission output 1 high limit	Resistivity transmission: Measurement range low limit Temperature transmission: 0.0℃ MV transmission: 0.0%	
TRo42 TEMP□	**Transmission output 2 type** (*3) SE□□□ : Resistivity transmission TEMP□ : Temperature transmission MV2□□ : EVT2 MV transmission MV3□□ : EVT3 MV transmission (*4) MV4□□ : EVT4 MV transmission (*4)	Temperature transmission	
TRLH2 □ 100.0	**Transmission output 2 high limit** (*3) Resistivity transmission: Transmission output 2 low limit to Measurement range high limit (*1) Temperature transmission: Transmission output 2 low limit to 100.0℃ (*2) MV transmission: Transmission output 2 low limit to 100.0%	Resistivity transmission: Measurement range high limit Temperature transmission: 100.0℃ MV transmission: 100.0%	
TRLL2 □□□0.0	**Transmission output 2 low limit** (*3) Resistivity transmission: Measurement range low limit to Transmission output 2 high limit (*1) Temperature transmission: 0.0℃ to Transmission output 2 high limit (*2) MV transmission: 0.0% to Transmission output 2 high limit	Resistivity transmission: Measurement range low limit Temperature transmission: 0.0℃ MV transmission: 0.0%	
TRC41 bEFH□	**Transmission output 1 status when calibrating** bEFH□ : Last value HOLD SETH□ : Set value HOLD PVH□□ : Measured value	Last value HOLD	
TR4E1 □□0.00	**Transmission output 1 value HOLD when calibrating** Resistivity transmission: Measurement range low limit to Measurement range high limit (*1) Temperature transmission: 0.0 to 100.0℃ (*2) MV transmission: 0.0 to 100.0%	Resistivity transmission: Measurement range low limit Temperature transmission: 0.0℃ MV transmission: 0.0%	
TRC42 bEFH□	**Transmission output 2 status when calibrating** (*3) bEFH□ : Last value HOLD SETH□ : Set value HOLD PVH□□ : Measured value	Last value HOLD	

(*1) The measurement unit and decimal point place follow the measurement range.
(*2) The decimal point place does not follow the selection. It is fixed.
(*3) Available when Transmission output 2 (TA2 option) is ordered.
(*4) Available when EVT3, EVT4 outputs (EVT3 option) are/is ordered.

Character	Setting Item, Setting Range	Factory Default	Data
rR4E2 □□□0.0	**Transmission output 2 value HOLD when calibrating** (*1)	Resistivity transmission: Measurement range low limit Temperature transmission: 0.0℃ MV transmission: 0.0%	
	Resistivity transmission: Measurement range low limit to Measurement range high limit (*2) Temperature transmission: 0.0 to 100.0℃ (*3) MV transmission: 0.0 to 100.0%		
bKLr□ ALL□□	**Backlight selection**	All are backlit.	
	ALL□□ : All are backlit. 4E□□□ : Resistivity Display is backlit. rEMP□ : Temperature Display is backlit. Ac□□□ : Action indicators are backlit. 4ErMP : Resistivity Display + Temperature Display are backlit. 4EAc□ : Resistivity Display + Action indicators are backlit. rMPAc : Temperature Display + Action indicators are backlit.		
coLR□ REd□□	**Resistivity color**	Red	
	GRN□□ : Green REd□□ : Red oRG□□ : Orange 4EGR□ : Resistivity color changes continuously.		
cLP□□ □ 10.00	**Resistivity color reference value**	10.00 MΩ•cm	
	0.00 to Measurement range high limit (*2)		
cLRG□ □□0.10	**Resistivity color range**	0.10 MΩ•cm	
	0.10 to Measurement range high limit (*2)		
dPtM□ □□□□0	**Backlight time**	0 minutes	
	0 to 99 minutes		
bER4L -----□	**Bar graph indication**	No indication	
	-----□ : No indication rAoT 1 : Transmission output 1 rAoT2 : Transmission output 2		
INERR oFF□□	**EVT output when input errors occur**	Disabled	
	oFF□□ : Disabled oN□□□ : Enabled		
oFdP□ oFF□□	**Temperature Display when no temperature compensation** (*4)	Unlit	
	oFF□□ : Unlit 4Fd□□ : Reference temperature PV□□□ : Measured value		

(*1) Available when Transmission output 2 (TA2 option) is ordered.
(*2) The measurement unit and decimal point place follow the measurement range.
(*3) The decimal point place does not follow the selection. It is fixed.
(*4) Available when oFF□□ (No temperature compensation) is selected in [Temperature compensation method].

Character	Setting Item, Setting Range	Factory Default	Data
M_SEC SEC	**Resistivity input error alarm time unit** SEC : Second(s) MIN : Minute(s)	Second(s)	
RCUT OFF	**Measurement range cut function** OFF: Disabled ON: Enabled	Disabled	

13.14 Error Code List

If the following errors occur, corresponding error codes will be flashing on the Temperature Display.

Error Code	Error Type	Error Contents	Description	Occur-rence
ERR01	Fail	Temperature sensor burnout	Temperature sensor lead wire is burnt out.	When measuring or calibrating
ERR02	Fail	Temperature sensor short-circuited	Temperature sensor lead wire is short-circuited.	
ERR03	Error	Outside temperature compensation range	Measured temperature has exceeded 110.0℃.	
ERR04	Error	Outside temperature compensation range	Measured temperature is less than 0.0℃.	

***** Inquiries *****

For any inquiries about this unit, please contact our agency or the vendor where you purchased the unit after checking the following.

[Example]

- Model ---------- AER-102-SE
- Serial number ---------- No. 195F05000

In addition to the above, please let us know the details of the malfunction, or discrepancy, and the operating conditions.

SHINKO TECHNOS CO., LTD.
OVERSEAS DIVISION

Head Office: 2-5-1, Senbahigashi, Minoo, Osaka, Japan
URL: http://www.shinko-technos.co.jp/e/ Tel : +81-72-727-6100
E-mail: overseas@shinko-technos.co.jp Fax: +81-72-727-7006

No.AER11SEE5 2019.12