DIGITAL INDICATOR

JIR-301-M

Instruction Manual

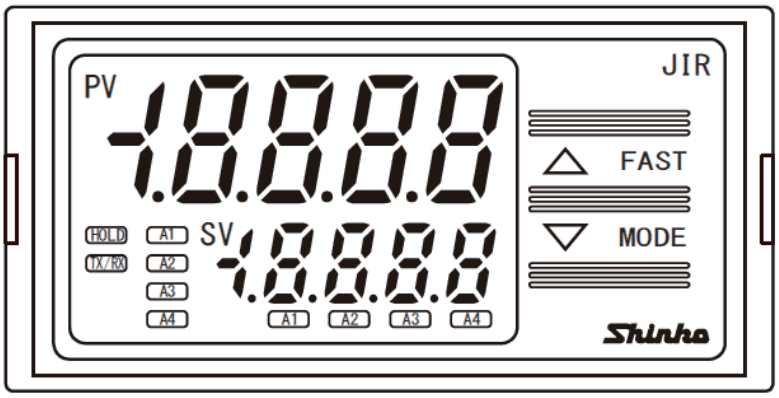

Shinko

Preface

Thank you for purchasing our Digital Indicator JIR-301-M. This manual contains instructions for the mounting, functions, operations and notes when operating the JIR-301-M. To prevent accidents arising from the misuse of this instrument, please ensure the operator receives this manual.

Notes

- This instrument should be used in accordance with the specifications described in the manual. If it is not used according to the specifications, it may malfunction or cause a fire.
- Be sure to follow the warnings, cautions and notices. If they are not observed, serious injury or malfunction may occur.
- The contents of this instruction manual are subject to change without notice.
- Care has been taken to ensure that the contents of this instruction manual are correct, but if there are any doubts, mistakes or questions, please inform our sales department.
- Measures must be taken to ensure that the operator cannot touch power terminals or other high voltage sections.
- Any unauthorized transfer or copying of this document, in part or in whole, is prohibited.
- Shinko Technos Co., Ltd. is not liable for any damage or secondary damage(s) incurred as a result of using this product, including any indirect damage.

Safety Precautions **(Be sure to read these precautions before using our products.)**

The safety precautions are classified into categories: “Warning” and “Caution”. Depending on circumstances, procedures indicated by ⚠ Caution may result in serious consequences, so be sure to follow the directions for usage.

⚠ Warning Procedures which may lead to dangerous conditions and cause death or serious injury, if not carried out properly.

⚠ Caution Procedures which may lead to dangerous conditions and cause superficial to medium injury or physical damage or may degrade or damage the product, if not carried out properly.

⚠ Warning

- To prevent an electrical shock or fire, only Shinko or other qualified service personnel may handle the inner assembly.
- To prevent an electrical shock, fire or damage to the instrument, parts replacement may only be undertaken by Shinko or other qualified service personnel.

⚠ Safety Precautions

- To ensure safe and correct use, thoroughly read and understand this manual before using this instrument.
- This instrument is intended to be used for industrial machinery, machine tools and measuring equipment. Verify correct usage after purpose-of-use consultation with our agency or main office. (Never use this instrument for medical purposes with which human lives are involved.)
- External protection devices such as protective equipment against excessive temperature rise, etc. must be installed, as malfunction of this product could result in serious damage to the system or injury to personnel. Proper periodic maintenance is also required.
- This instrument must be used under the conditions and environment described in this manual. Shinko Technos Co., Ltd. does not accept liability for any injury, loss of life or damage occurring due to the instrument being used under conditions not otherwise stated in this manual.

Caution with respect to Export Trade Control Ordinance

To avoid this instrument from being used as a component in, or as being utilized in the manufacture of weapons of mass destruction (i.e. military applications, military equipment, etc.), please investigate the end users and the final use of this instrument. In the case of resale, ensure that this instrument is not illegally exported.

1. Installation Precautions

⚠ Caution

This instrument is intended to be used under the following environmental conditions (IEC61010-1): Overvoltage category Ⅱ, Pollution degree 2
Ensure the mounting location corresponds to the following conditions:

- A minimum of dust, and an absence of corrosive gases
- No flammable, explosive gases
- No mechanical vibrations or shocks
- No exposure to direct sunlight, an ambient temperature of 0 to 50℃ (32 to 122℉) that does not change rapidly, and no icing
- An ambient non-condensing humidity of 35 to 85 %RH
- No large capacity electromagnetic switches or cables through which large current is flowing
- No water, oil or chemicals or where the vapors of these substances can come into direct contact with the unit
- Please note that the ambient temperature of this unit – not the ambient temperature of the control panel – must not exceed 50℃ (122℉) if mounted through the face of a control panel, otherwise the life of electronic components (especially electrolytic capacitors) may be shortened.

Note • Avoid setting this instrument directly on or near flammable material even though the case of this instrument is made of flame-resistant resin.

2. Wiring Precautions

⚠ Caution

- Do not leave wire remnants in the instrument, as they could cause a fire or malfunction.
- The terminal block of this instrument is designed to be wired from the upper side. The lead wire must be inserted from the upper side of the terminal, and fastened with the terminal screw.
- Tighten the terminal screw using the specified torque. If excessive force is applied to the screw when tightening, the terminal screw or case may be damaged.
- Do not pull or bend the lead wire on the terminal side when wiring or after wiring, as it could cause malfunction.
- Use a thermocouple and compensating lead wire according to the sensor input specifications of this instrument.
- Use the 3-wire RTD according to the sensor input specifications of this instrument.
- This instrument does not have a built-in power switch, circuit breaker and fuse. It is necessary to install a-power switch, circuit breaker and fuse near the instrument.
  (Recommended fuse: Time-lag fuse, rated voltage 250 V AC, rated current 2 A)
- For a 24 V AC/DC power source, do not confuse polarity when using direct current (DC).
- When using a relay contact output type, externally use a relay according to the capacity of the load to protect the built-in relay contact.
- When wiring, keep input wires (thermocouple, RTD, etc.) away from AC power sources or load wires.
- Do not apply a commercial power source to the sensor which is connected to the input terminal nor allow the power source to come into contact with the sensor.

3. Operation and Maintenance Precautions

⚠ Caution

- Do not touch live terminals. This may cause electrical shock or problems in operation.
- Turn the power supply to the instrument OFF before retightening the terminal or cleaning.
  Working on or touching the terminal with the power switched ON may result in severe injury or death due to electrical shock.
- Use a soft, dry cloth when cleaning the instrument.
  (Alcohol based substances may tarnish or deface the unit.)
- As the display section is vulnerable, be careful not to put pressure on, scratch or strike it with a hard object.

Characters used in this manual (□: No character is indicated.)

Indication	-1	0	1	2	3	4	5	6	7	8	9	C	F	
Number, ℃/℉	-1	0	1	2	3	4	5	6	7	8	9	℃	℉	
Indication	A	n	b	c	d	E	F	G	H	I	J	k	L	m
Alphabet	A		B	C	D	E	F	G	H	I	J	K	L	M
Indication	n	o	P	q	r	s	T	U	v	w	x	y	z	
Alphabet	N	O	P	Q	R	S	T	U	V	W	X	Y	Z	

Contents

1. Model

1.1 Model

JIR-301-M □, □□□			Series name: JIR-301-M (W96 x H48 x D100 mm)		
Input	M		Multi-range (*1)		
Power supply	1		24 V AC/DC (*2)		
Option		A4	Alarm 4 output (*3)		
		C5	Serial communication (RS-485)(*4)		
		P24	Insulated power output 24±3 V DC (*5)		
		P5	Insulated power output 5±0.5 V DC (*5)		
		DSB	Power for 2-wire transmitter (Current loop supply)(*6)		
		TA2 (4-20)	Transmission output 2 (*3)	Direct current output	4 to 20 mA DC
		TA2 (0-20)			0 to 20 mA DC
		TV2 (0-1)		DC voltage output	0 to 1 V DC
		TV2 (0-5)			0 to 5 V DC
		TV2 (1-5)			1 to 5 V DC
		TV2 (0-10)			0 to 10 V DC
		TA (0-20)	User specified Transmission output (*7)	Direct current output	0 to 20 mA DC
		TV (0-1)		DC voltage output	0 to 1 V DC
		TV (0-5)			0 to 5 V DC
		TV (1-5)			1 to 5 V DC
		TV (0-10)			0 to 10 V DC
		BK	Color: Black		
		TC	Terminal cover		

Alarms A1, A2 and A3 outputs are standard features. Alarm types (4 types for A1, A2, and 5 types for A3 as well as No alarm action) and Energized/De-energized can be selected.

(*1) Thermocouple (10 types), RTD (2 types), Direct current (2 types) and DC voltage (4 types) can be selected by keypad.

(*2) Power supply voltage 100 to 240 V AC is standard. When ordering 24 V AC/DC, enter '1' after the input code.

(*3) Alarm 4 output (A4 option) and Transmission output 2 (T□2 option) cannot be used together.

(*4) If Serial communication (RS-485)[C5 option] is ordered, the Event input function will not be available.

(*5) Insulated power output (P24 option) and Insulated power output (P5 option) cannot be used together. If Insulated power output (P24 option) or Insulated power output (P5 option) is ordered, A2 output cannot be used.

(*6) If Power for 2-wire transmitter (DSB option) is ordered, only 4 to 20 mA DC input (Built-in 50 Ω shunt resistor) can be used.

(*7) TA (4-20 mA DC) is a standard feature.

1.2 How to Read the Model Label

Model labels are attached to the case and the inner assembly.

Top of the case

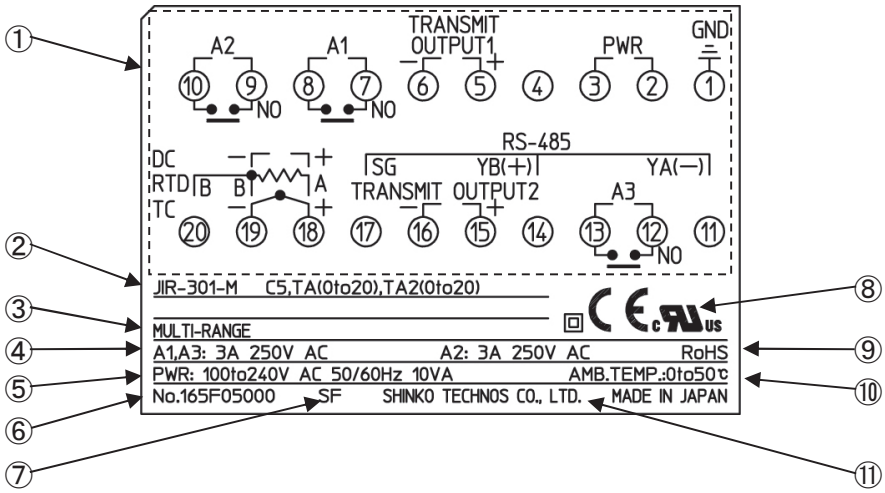

(Fig. 1.2-1)

No.	Description	Example
①	Terminal arrangement	Terminal arrangement of JIR-301-M C5, TA(0 to 20), TA2(0 to 20)
②	Model	JIR-301-M C5, TA(0 to 20), TA2(0 to 20)
③	Input	MULTI-RANGE (Multi-range input)
④	A1, A2, A3, A4, P24, P5 outputs	A1, A3: 3 A 250 V AC A2: 3 A 250 V AC
⑤	Power supply voltage Power consumption	100 to 240 V AC 50/60 Hz, 10 VA
⑥	Serial number	No.165F05000
⑦	Manufacturing factory ID	SF (Fukuoka factory)
⑧	Compliant standards	UL, CSA
⑨	RoHS	RoHS directive compliant
⑩	Ambient temperature	0 to 50℃
⑪	Manufacturer	SHINKO TECHNOS CO., LTD.

Inner assembly

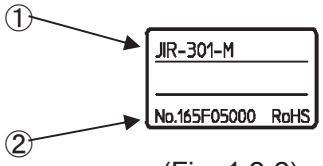

(Fig. 1.2-2)

No.	Description	Example
①	Model	JIR-301-M
②	Serial number	No. 165F05000

2. Name and Functions

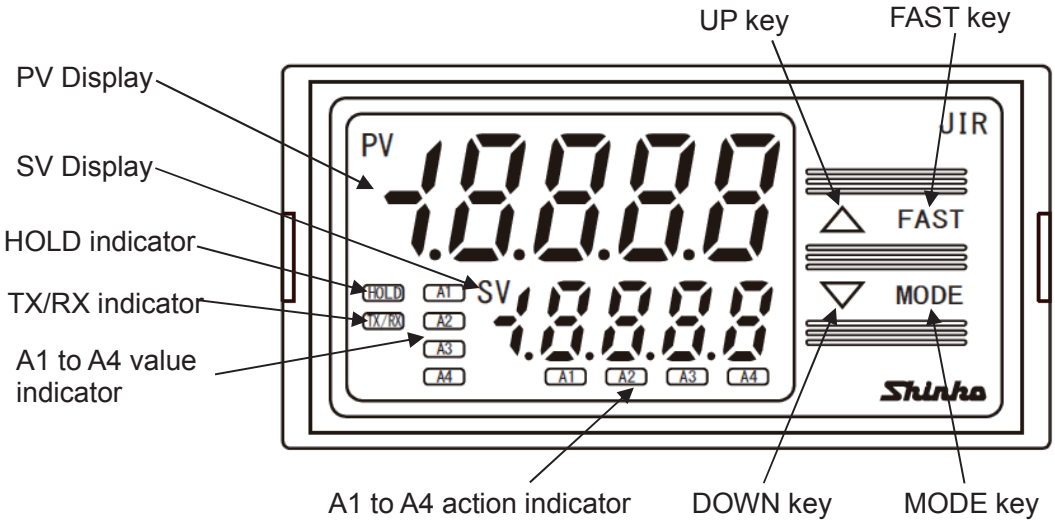

(Fig. 2-1)

Display, Indicator

Name	Description
PV Display	Indicates PV (process variable) or characters in the setting mode with the red LED.
SV Display	Indicates A1/A2/A3/A4 value or the set value in the setting mode with the green LED.
HOLD indicator	When PV is held (HOLD, Peak HOLD, Bottom HOLD), the yellow LED is lit.
TX/RX indicator	The yellow LED is lit during Serial communication (C5 option) TX (transmitting) output.
A1 value indicator	When A1 value is indicated on the SV Display, the green LED is lit.
A2 value indicator	When A2 value is indicated on the SV Display, the green LED is lit.
A3 value indicator	When A3 value is indicated on the SV Display, the green LED is lit.
A4 value indicator	When A4 value is indicated on the SV Display, the green LED is lit. (A4 option)
A1 action indicator	When A1 output is ON, the red LED is lit. While A1 output is held (maintained), the red LED flashes.
A2 action indicator	When A2 output is ON, the red LED is lit. While A2 output is held (maintained), the red LED flashes.
A3 action indicator	When A3 output is ON, the red LED is lit. While A3 output is held (maintained), the red LED flashes.
A4 action indicator	When A4 output is ON, the red LED is lit. While A4 output is held (maintained), the red LED flashes. (A4 option)

Key

Name	Description
UP key	Increases the numeric value. If High/Low limit range alarm is selected in [A4 type], and if the SV Display indicates A4 value, the SV Display indicates A4 high limit value while the UP key is pressed.
FAST key	Makes the set value change faster while pressing the UP/DOWN key and FAST key together.
DOWN key	Decreases the numeric value.
MODE key	Selects the setting mode, and registers the set value.

⚠ Notice

When setting the specifications and functions of this instrument, connect mains power cable to terminals 2 and 3 first, then set them referring to “5. Setup” before performing “3. Mounting to the Control Panel” and “4. Wiring”.

3. Mounting to the Control Panel

3.1 Site Selection

This instrument is intended to be used under the following environmental conditions (IEC61010-1): Overvoltage category Ⅱ, Pollution degree 2

Ensure the mounting location corresponds to the following conditions:

- A minimum of dust, and an absence of corrosive gases
- No flammable, explosive gases
- No mechanical vibrations or shocks
- No exposure to direct sunlight, an ambient temperature of 0 to 50℃ (32 to 122℉) that does not change rapidly
- An ambient non-condensing humidity of 35 to 85 %RH
- No large capacity electromagnetic switches or cables through which large current is flowing
- No water, oil or chemicals or where the vapors of these substances can come into direct contact with the unit
- Please note that the ambient temperature of this unit – not the ambient temperature of the control panel – must not exceed 50℃ (122℉) if mounted through the face of a control panel, otherwise the life of electronic components (especially electrolytic capacitors) may be shortened.

3.2 External Dimensions (Scale: mm)

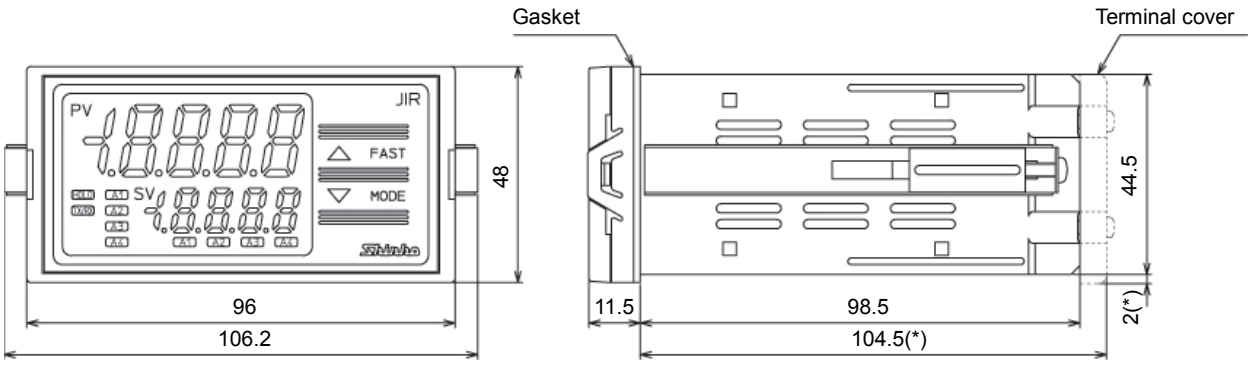

(*) When terminal cover is used

(Fig. 3.2-1)

3.3 Panel Cutout (Scale: mm)

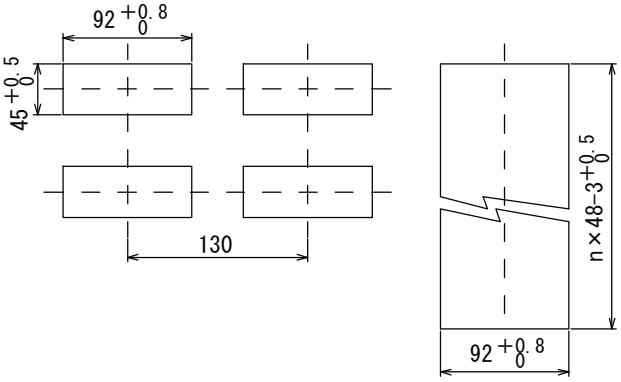

Vertical close mounting
n: Number of mounted units

⚠ Caution: If vertical close mounting is used for the instrument, IP66 (Drip-proof/ Dust-proof) may be compromised, and all warranties will be invalidated.

(Fig. 3.3-1)

3.4 Mounting the Unit

Mount the instrument vertically to the flat, rigid panel to ensure it adheres to the Drip-proof/Dust-proof specification (IP66).

Mountable panel thickness: 1 to 8 mm

(1) Insert the instrument from the front side of the control panel.

(2) Attach the mounting brackets by the slots on the right and left sides of the case, and secure the instrument in place with the screws.

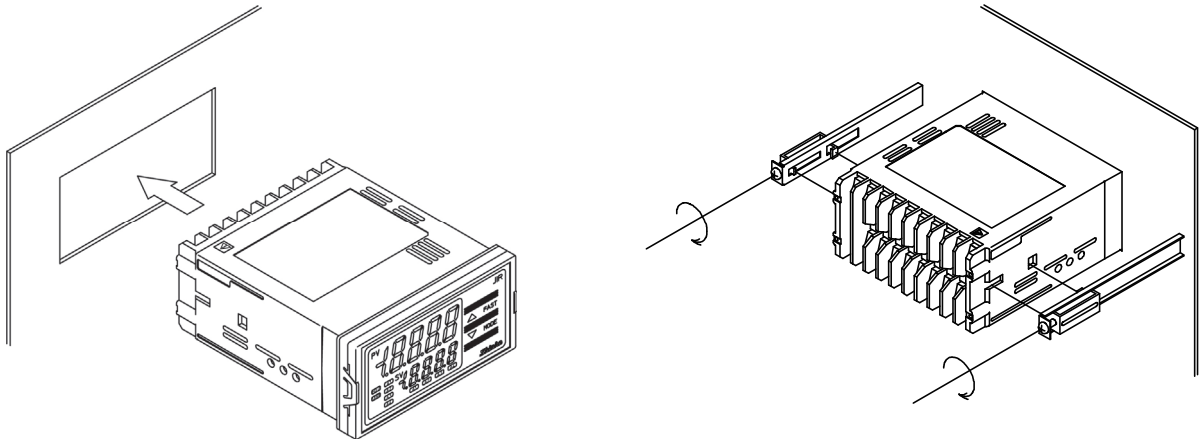

(Fig. 3.4-1)

⚠ Caution

As the case of the JIR-301-M is made of resin, do not use excessive force while tightening screws, or the mounting brackets or case could be damaged.
0.12 N•m of torque is recommended.

4. Wiring

⚠ Warning

Turn the power supply to the instrument off before wiring or checking.
Working on or touching the terminal with the power switched on may result in severe injury or death due to electrical shock.

⚠ Caution

- Do not leave wire remnants in the instrument, as they could cause a fire or malfunction.
- The terminal block of this instrument is designed to be wired from the upper side. The lead wire must be inserted from the upper side of the terminal, and fastened with the terminal screw.
- Tighten the terminal screw using the specified torque. If excessive force is applied to the screw when tightening, the terminal screw or case may be damaged.
- Do not pull or bend the lead wire on the terminal side when wiring or after wiring, as it could cause malfunction.
- Use a thermocouple and compensating lead wire according to the sensor input specifications of this instrument.
- Use the 3-wire RTD according to the sensor input specifications of this instrument.
- This instrument does not have a built-in power switch, circuit breaker and fuse. It is necessary to install a-power switch, circuit breaker and fuse near the instrument.
  (Recommended fuse: Time-lag fuse, rated voltage 250 V AC, rated current 2 A)
- For a 24 V AC/DC power source, do not confuse polarity when using direct current (DC).
- When using a relay contact output type, externally use a relay according to the capacity of the load to protect the built-in relay contact.
- When wiring, keep input wires (thermocouple, RTD, etc.) away from AC power sources or load wires.
- Do not apply a commercial power source to the sensor which is connected to the input terminal nor allow the power source to come into contact with the sensor.

4.1 Terminal Arrangement

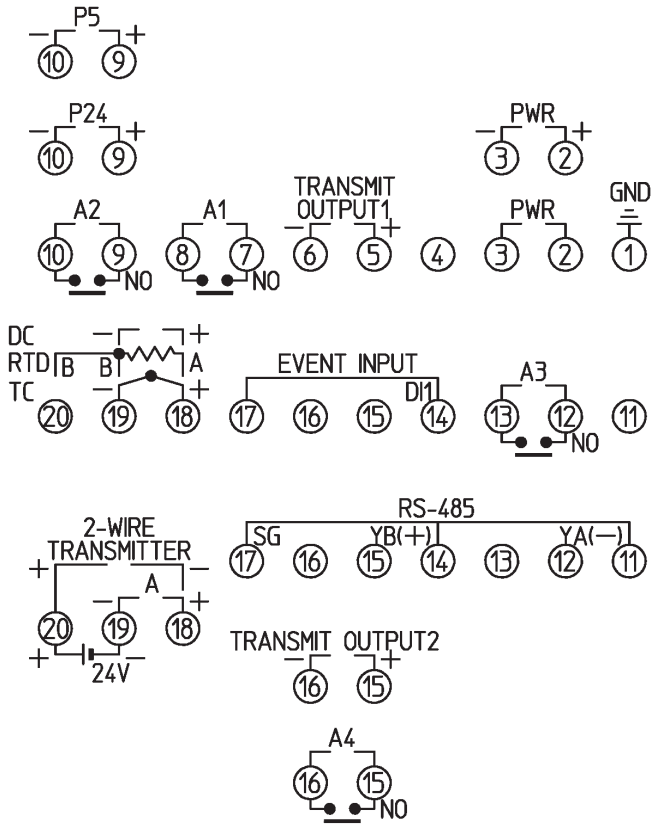

(Fig. 4.1-1)

Terminal Name	Description
GND	Ground terminal
PWR	Power supply
TRANSMIT OUTPUT1	Transmission output 1
A1	A1 output
A2	A2 output
A3	A3 output
EVENT INPUT	Event input
TC	Thermocouple input
RTD	RTD input
DC	Direct current input, DC voltage input **For Direct current input (externally mounted 50 Ω shunt resistor), connect a 50 Ω shunt resistor (sold separately) between input terminals.**
P24	Insulated power output 24 V (P24 option)
P5	Insulated power output 5 V (P5 option)
RS-485	Serial communication (RS-485) (C5 option)
TRANSMIT OUTPUT2	Transmission output 2 (T□2 option)
A4	A4 output (A4 option)
A	Direct current input (DSB option)
24V	Power for 2-wire transmitter (DSB option)

4.2 Lead Wire Solderless Terminal

Use a solderless terminal with an insulation sleeve in which an M3 screw fits as shown below.
0.63 N•m of torque is recommended.

Solderless Terminal	Manufacturer	Model
Y-type	Nichifu Terminal Industries Co., Ltd.	TMEV1.25Y-3
	Japan Solderless Terminal MFG Co., Ltd.	VD1.25-B3A
Ring-type	Nichifu Terminal Industries CO., Ltd.	TMEV1.25-3
	Japan Solderless Terminal MFG Co., Ltd.	V1.25-3

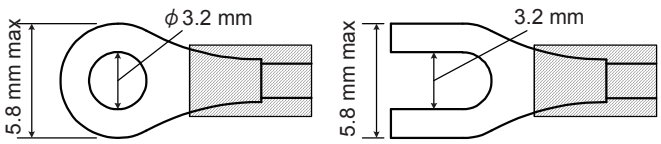

(Fig. 4.2-1)

4.3 When Using as a Current Loop Supply

Refer to the following wiring example.

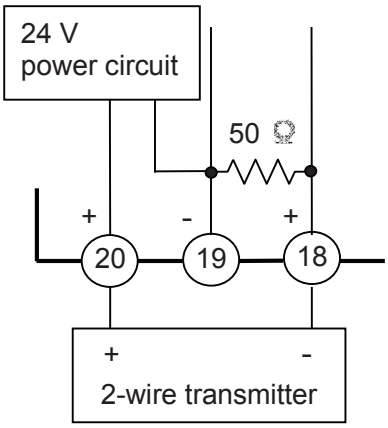

(Fig. 4.3-1)

5. Setup

After power is turned ON, the input characters and temperature unit will be indicated on the PV Display, and the input range high limit (for thermocouple, RTD input) or scaling high limit (for Direct current, DC voltage input) will be indicated on the SV Display for approx. 3 sec. (Table 5-1)
During this time, all outputs and LED indicators are in an OFF status. Operation will then start, indicating the PV (process variable) on the PV Display, and A1, A2, A3 or A4 value on the SV Display.

(Table 5-1)

Sensor Input	PV Display (℃)	SV Display	PV Display (℉)	SV Display
K	tC	1370	tF	2500
	t.C	400.0	t.F	750.0
J	JC	1000	JF	1800
R	rC	1760	rF	3200
S	sC	1760	sF	3200
B	bC	1820	bF	3300
E	EC	800	EF	1500
T	T.C	400.0	T.F	750.0
N	nC	1300	nF	2300
PL-Ⅱ	PL2C	1390	PL2F	2500
C (W/Re5-26)	cC	2315	cF	4200
Pt100	Pt.C	850.0	Pt.F	1000.0
JPt100	JPt.C	500.0	JPt.F	900.0
Pt100	PtC	850	PtF	1500
JPt100	JPtC	500	JPtF	900
4-20 mA DC (*1)(*2)	420A			
0-20 mA DC (*1)(*2)	020A			
0-1 V DC (*1)	01V			
0-5 V DC (*1)	05V	Scaling high		
1-5 V DC (*1)	15V	limit value		
0-10 V DC (*1)	010V			
4-20 mA DC (*1)(*3)	420I			
0-20 mA DC (*1)(*3)	020I			

(*1) Input range and decimal point place can be selected.
(*2) Connect a 50 Ω shunt resistor (sold separately) between input terminals.
(*3) Has a built-in 50 Ω shunt resistor.
If Power for 2-wire transmitter (DSB option) is ordered, only 4 to 20 mA DC input (Built-in 50 Ω shunt resistor) can be used.

5.1 Registering the Selected Item or Value

- To increase or decrease the numeric value, use the UP or DOWN key.
  To make the set value change faster, press the UP/DOWN key and FAST key together .
  Select an setting item with the UP or DOWN key.
- Register the setting item or value using the MODE key.

5.2 Alarm Setting Mode

If the **MODE key** is pressed in PV/SV display mode, the unit will move to Alarm setting mode.

Character Factory Default	Setting Item, Function, Setting Range
A 1 0	**A1 value** • Sets A1 output action point. • Not available if No alarm action is selected in [A1 type] • Setting range: Refer to (Table 5.2-1).
A2 0	**A2 value** • Sets A2 output action point. • Not available if No alarm action is selected in [A2 type] Not available if Insulated power output (P24 option or P5 option) is ordered. • Setting range: Refer to (Table 5.2-1).
A3 0	**A3 value** • Sets A3 output action point. • Not available if No alarm action or High/Low limit range alarm is selected in [A3 type] • Setting range: Refer to (Table 5.2-1).
A4 0	**A4 value** • Sets A4 output action point. • Available when Alarm 4 output (A4 option) is ordered. Not available if No alarm action is selected in [A4 type] If High/Low limit range alarm is selected in [A4 type], A4 value matches A4 low limit alarm value. • Setting range: Refer to (Table 5.2-1).
A4H 0	**A4 high limit value** • Sets A4 output high limit action point. • Available when Alarm 4 output (A4 option) is ordered, or when High/Low limit range alarm is selected in [A4 type]. • Setting range: Refer to (Table 5.2-1).

(Table 5.2-1)

Alarm Type	Setting Range
High limit alarm	Input range low limit to input range high limit (*1)
Low limit alarm	Input range low limit to input range high limit (*1)
High limit with standby alarm	Input range low limit to input range high limit (*1)
Low limit with standby alarm	Input range low limit to input range high limit (*1)
High/Low limit range alarm (A4)	A4 low limit value: Input range low limit (*2) to A4 high limit A4 high limit value: A4 low limit to input range high limit (*3)

• The placement of the decimal point follows the selection or input range.

(*1) For direct current and DC voltage input: Setting range is [Scaling low limit to Scaling high limit].
(*2) For direct current and DC voltage input: Will be substituted by the Scaling low limit.
(*3) For direct current and DC voltage input: Will be substituted by the Scaling high limit.

5.3 Auxiliary Function Setting Mode 1

To enter Auxiliary Function Setting Mode 1, press and hold the **DOWN key** and **MODE key** (in that order) together for approx. 3 seconds in PV/SV Display Mode.

Character Factory Default	Setting Item, Function, Setting Range
Lock - - - -	**Set value lock** • Locks the set values to prevent setting errors. The setting item to be locked depends on the selection. • - - - - (Unlock): All set values can be changed. Loc 1 (Lock 1): None of the set values can be changed. Loc2 (Lock 2): Only Alarm setting mode (p.14) can be changed. Loc3 (Lock 3): All set values – except the input type (p.18) – can be changed. However, changed values revert to their previous value after power is turned off because they are not saved in the non-volatile IC memory. Do not change any setting items in Auxiliary function setting mode 2 (pp.18 - 24). If any item is changed in Auxiliary function setting mode 2, it will affect the alarm value (A1 value - A4 value).
hot 1.000	**Sensor correction coefficient** • Sets sensor correction coefficient. Sets slope of input value from a sensor. PV after sensor correction= Current PV x (Sensor correction coefficient) + (Sensor correction value) Refer to 'Input Value Correction' (p. 17). • Setting range: -10.000 to 10.000
ho 0.0	**Sensor correction** • This corrects the input value from the sensor. When a sensor cannot be set at the exact location where measurement is desired, the sensor-measured temperature may deviate from the temperature in the measurement location. When using multiple indicators, sometimes the measured temperatures do not match due to differences in sensor accuracy or installation site. In such a case, the temperature in the installation site can be adjusted to the desired temperature by adjusting the sensor input value. PV after sensor correction= Current PV x (Sensor correction coefficient) + (Sensor correction value) Refer to 'Input Value Correction' (p.17). • Setting range: -1000.0 to 1000.0℃ (℉) Direct current, DC voltage input: -10000 to 10000 (The placement of the decimal point follows the selection.)
cnhL nonL	**Communication protocol** • Selects communication protocol. Available only when Serial communication (C5 option) is ordered. • nonL : Shinko protocol modA : Modbus ASCII mode modr : Modbus RTU mode bnnL : Shinko protocol (Block read available) bmdA : Modbus ASCII mode (Block read available) bmdr : Modbus RTU mode (Block read available)

Character Factory Default	Setting Item, Function, Setting Range
cnno 0	**Instrument number** • Sets the individual instrument number of this unit. (The instrument numbers should be set one by one when multiple instruments are connected in Serial communication.) • Available only when the Serial communication (C5 option) is ordered • Setting range: 0 to 95
cnsP 96	**Communication speed** • Selects a communication speed equal to that of the host computer. • Available only when the Serial communication (C5 option) is ordered. • 24 : 2400 bps 48 : 4800 bps 96 : 9600 bps 192 : 19200 bps 384 : 38400 bps
cnPr EvEn	**Parity** • Selects the parity. • Available when Serial communication (C5 option) is ordered, or when Modbus ASCII mode or Modbus RTU mode is selected in [Communication protocol]. • nonE : No parity EvEn : Even odd : Odd
cnsT 1	**Stop bit** • Selects the stop bit. • Available when Serial communication (C5 option) is ordered, or when Modbus ASCII mode or Modbus RTU mode is selected in [Communication protocol]. • 1 : 1 bit 2 : 2 bits

Input Value Correction

Input value can be corrected in [Sensor correction coefficient] and [Sensor correction] in Auxiliary Function Setting Mode 1.

In [Sensor correction coefficient], set the slope of temperature change.

In [Sensor correction], set the difference between temperatures before correction and after correction.

PV after input correction is expressed by the following formula.

PV after input correction = Current PV x Sensor correction coefficient + (Sensor correction value)

The following shows an example of input value correction using 'Sensor correction coefficient' and 'Sensor correction value'.

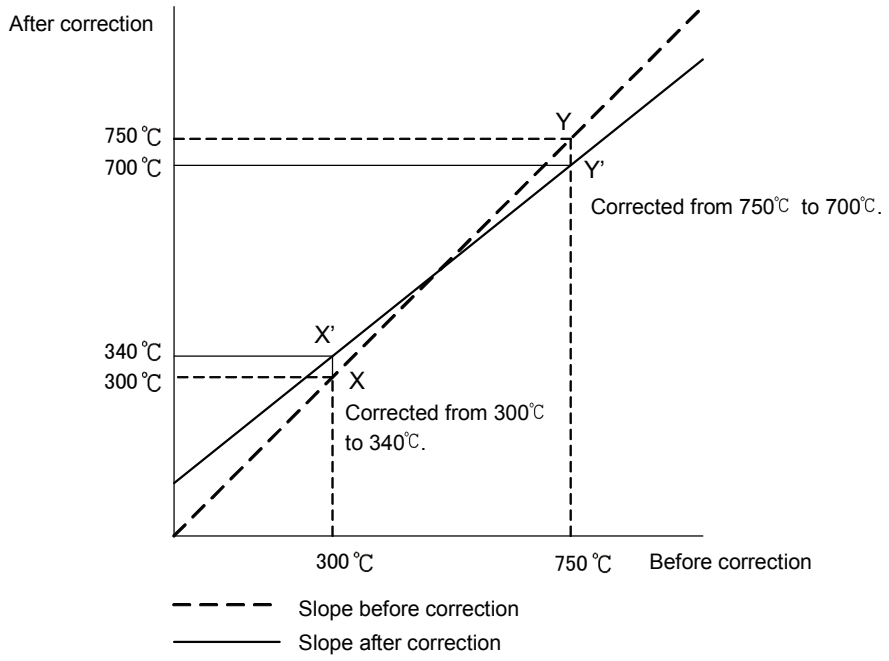

(Fig. 5.3-1)

(1) Select any 2 points of PV to be corrected, and determine the PV after correction.
PV before correction: 300℃ → PV after correction: 340℃
PV before correction: 750℃ → PV after correction: 700℃

(2) Calculate Sensor correction coefficient from Step (1).
$(Y' - X') / (Y - X) = (700 - 340) / (750 - 300) = 0.8$

(3) Enter a PV value of 300℃ using an mV generator or dial resistor.

(4) Set Step (2) value as a Sensor correction coefficient.

(5) Read the PV.
240℃ will be indicated.

(6) Calculate the sensor correction value.
Calculate the difference between 'PV after correction' and Step (5) PV.
340℃ – 240℃ = 100℃

(7) Set Step (6) value as a Sensor correction value.

(8) Enter an electromotive force or resistance value equivalent to 750℃ using an mV generator or dial resistor.

(9) Read the PV, and confirm that 700℃ is indicated.

5.4 Auxiliary Function Setting Mode 2

To enter Auxiliary Function Setting Mode 2, press and hold the **UP**, **DOWN** and **MODE keys** (in that order) together for approx. 3 seconds in PV/SV Display Mode.

Character Factory Default	Setting Item, Function, Setting Range
sEnS tC	**Input type** • The input type can be selected from thermocouple (10 types), RTD (2 types), Direct current (2 types) and DC voltage (4 types), and the unit ℃/℉ can be selected as well. Not available when Power for 2-wire transmitter (DSB option) is ordered. • When changing the input from DC voltage to other inputs, remove the sensor connected to this instrument first, then change the input. If the input is changed with the sensor connected, the input circuit may break. (Table 5.4-1)

Character	Input Range	Character	Input Range
tC	K -200 to 1370℃	tF	K -320 to 2500℉
t .C	K -200.0 to 400.0℃	t .F	K -200.0 to 750.0℉
JC	J -200 to 1000℃	JF	J -320 to 1800℉
rC	R 0 to 1760℃	rF	R 0 to 3200℉
sC	S 0 to 1760℃	sF	S 0 to 3200℉
bC	B 0 to 1820℃	bF	B 0 to 3300℉
EC	E -200 to 800℃	EF	E -320 to 1500℉
T .C	T -200.0 to 400.0℃	T .F	T -200.0 to 750.0℉
nC	N -200 to 1300℃	nF	N -320 to 2300℉
PL2C	PL-Ⅱ 0 to 1390℃	PL2F	PL-Ⅱ 0 to 2500℉
cC	C(W/Re5-26) 0 to 2315℃	cF	C(W/Re5-26) 0 to 4200℉
Pt .C	Pt100 -200.0 to 850.0℃	Pt .F	Pt100 -200.0 to 1000.0℉
JPt.C	JPt100 -200.0 to 500.0℃	JPt.F	JPt100 -200.0 to 900.0℉
PtC	Pt100 -200 to 850℃	PtF	Pt100 -300 to 1500℉
JPtC	JPt100 -200 to 500℃	JPtF	JPt100 -300 to 900℉
420A	4 to 20 mA DC -2000 to 10000 (Externally mounted 50 Ω shunt resistor)		
020A	0 to 20 mA DC -2000 to 10000 (Externally mounted 50 Ω shunt resistor)		
01 1V	0 to 1 V DC -2000 to 10000		
05V	0 to 5 V DC -2000 to 10000		
15V	1 to 5 V DC -2000 to 10000		
0 10V	0 to 10 V DC -2000 to 10000		
420I	4 to 20 mA DC -2000 to 10000 (Built-in 50 Ω shunt resistor)		
020I	0 to 20 mA DC -2000 to 10000 (Built-in 50 Ω shunt resistor)		

SFLH 10000	**Scaling high limit** • Sets scaling high limit value. • Available when direct current or DC voltage input is selected in [Input type]. • Setting range: Scaling low limit to Input range high limit (The placement of the decimal point follows the selection or input range.)
SFLL -2000	**Scaling low limit** • Sets scaling low limit value. • Available when direct current or DC voltage input is selected in [Input type]. • Setting range: Input range low limit to Scaling high limit (The placement of the decimal point follows the selection or input range.)

Character Factory Default	Setting Item, Function, Setting Range
dP 0	**Decimal point place** • Selects decimal point place. • Available when direct current or DC voltage input is selected in [Input type]. • 0 : No decimal point 0.0 : 1 digit after decimal point 0.00 : 2 digits after decimal point 0.000 : 3 digits after decimal point
FILT 0.0	**PV filter time constant** • Sets PV filter time constant. If the value is set too large, it affects alarm action due to the delay of response. • Setting range: 0.0 to 10.0 sec
AL 1F ----	**A1 type** • Selects an A1 type. See Section 7.1 (p.27). • If A1 type is changed, A1 value will default to 0 (0.0). • ----: No alarm action H : High limit alarm L : Low limit alarm H : High limit with standby alarm L : Low limit with standby alarm
AL2F ----	**A2 type** • Selects an A2 type. See Section 7.1 (p.27). Not available if Insulated power output (P24 option or P5 option) is ordered. • If A2 type is changed, A2 value will default to 0 (0.0). • ---- : No alarm action H : High limit alarm L : Low limit alarm H : High limit with standby alarm L : Low limit with standby alarm
AL3F ----	**A3 type** • Selects an A3 type. See Section 7.1 (p.27). • If A3 type is changed, A3 value will default to 0 (0.0). • ---- : No alarm action H : High limit alarm L : Low limit alarm H : High limit with standby alarm L : Low limit with standby alarm Hld : High/Low limit range alarm [See Section 7.2 (p.28).]

Character Factory Default	Setting Item, Function, Setting Range
AL4F ----	**A4 type** • Selects an A4 type. See Section 7.1 (p.27). Available when Alarm 4 output (A4 option) is ordered. • If A4 type is changed, A4 value will default to 0 (0.0). • ----: No alarm action H□□□: High limit alarm L□□□: Low limit alarm H□□u: High limit with standby alarm L□□u: Low limit with standby alarm ul d□: High/Low limit range alarm [See Section 7.3 (p.28).]
A1LA nonL	**A1 Energized/De-energized** • Selects A1 Energized/De-energized. Not available if No alarm action is selected in [A1 type]. • When [A1 Energized] is selected, A1 output (terminals 7, 8) is conducted (ON) while A1 action indicator is lit. A1 output is not conducted (OFF) while A1 action indicator is unlit. When [A1 De-energized] is selected, A1 output (terminals 7, 8) is not conducted (OFF) while A1 action indicator is lit. A1 output is conducted (ON) while A1 action indicator is unlit. A1 output will be substituted by A2, A3 or A4 output. A1 output terminals will be substituted by A2, A3 or A4 output terminals as follows. A2 output terminals: 9, 10 A3 output terminals: 12, 13 A4 output terminals: 15, 16 **High limit alarm (Energized)** **High limit alarm (De-energized)** 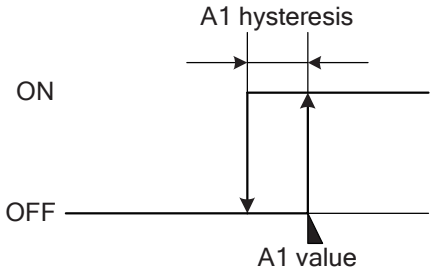 (Fig. 5.4-1) 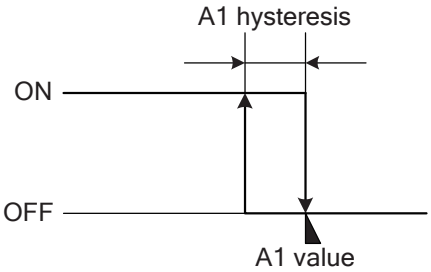 (Fig. 5.4-2) • nonL: Energized rEVS: De-energized
A2LA nonL	**A2 Energized/De-energized** • Selects A2 Energized/De-energized. Not available if No alarm action is selected in [A2 type]. Not available if Insulated power output (P24 option or P5 option) is ordered. • nonL: Energized rEVS: De-energized
A3LA nonL	**A3 Energized/De-energized** • Selects A3 Energized/De-energized. Not available if No alarm action or High/Low limit range alarm is selected in [A3 type]. • nonL: Energized rEVS: De-energized

Character Factory Default	Setting Item, Function, Setting Range
A4LA nonL	**A4 Energized/De-energized** • Selects A4 Energized/De-energized. Available only when Alarm 4 output (A4 option) is ordered. Not available if No alarm action is selected in [A4 type]. • nonL : Energized rEVS : De-energized
A1HY 1.0	**A1 hysteresis** • Sets A1 hysteresis. • Not available if No alarm action is selected in [A1 type]. • Setting range: 0.1 to 100.0℃ (℉) Direct current, DC voltage input: 1 to 1000 (The placement of the decimal point follows the selection.)
A2HY 1.0	**A2 hysteresis** • Sets A2 hysteresis. • Not available if No alarm action is selected in [A2 type]. Not available if Insulated power output (P24 option or P5 option) is ordered. • Setting range: 0.1 to 100.0℃ (℉) Direct current, DC voltage input: 1 to 1000 (The placement of the decimal point follows the selection.)
A3HY 1.0	**A3 hysteresis** • Sets A3 hysteresis. • Not available if No alarm action or High/Low limit range alarm is selected in [A3 type]. • Setting range: 0.1 to 100.0℃ (℉) Direct current, DC voltage input: 1 to 1000 (The placement of the decimal point follows the selection.)
A4HY 1.0	**A4 hysteresis** • Sets A4 hysteresis. • Available only when Alarm 4 output (A4 option) is ordered. Not available if No alarm action is selected in [A4 type]. • Setting range: 0.1 to 100.0℃ (℉) Direct current, DC voltage input: 1 to 1000 (The placement of the decimal point follows the selection.)
A1dY 0	**A1 delay time** • Sets A1 action delay time. When setting time has elapsed after the input enters the alarm output range, the alarm is activated. Not available if No alarm action is selected in [A1 type]. • Setting range: 0 to 9999 seconds
A2dY 0	**A2 delay time** • Sets A2 action delay time. When setting time has elapsed after the input enters the alarm output range, the alarm is activated. • Not available if No alarm action is selected in [A2 type]. Not available if the Insulated power output (P24 option or P5 option) is ordered. • Setting range: 0 to 9999 seconds

<table>
<tr><th>Character
Factory Default</th><th>Setting Item, Function, Setting Range</th></tr>
<tr><td>A3dY
0</td><td>A3 delay time
• Sets A3 action delay time.
When setting time has elapsed after the input enters the alarm output range, the alarm is activated.
• Not available if No alarm action or High/Low limit range alarm is selected in [A3 type].
• Setting range: 0 to 9999 seconds</td></tr>
<tr><td>A4dY
0</td><td>A4 delay time
• Sets A4 action delay time.
When setting time has elapsed after the input enters the alarm output range, the alarm is activated.
• Available when Alarm 4 output (A4 option) is ordered.
Not available if No alarm action is selected in [A4 type].
• Setting range: 0 to 9999 seconds</td></tr>
<tr><td>rrH1
1370</td><td>Transmission output 1 high limit
• Sets the Transmission output 1 high limit value.
Standard
<table><tr><td>4-20 mA DC</td><td>Equals 20 mA DC output.</td></tr></table>Optional
<table><tr><td>0-20 mA DC</td><td>Equals 20 mA DC output.</td></tr><tr><td>0-1 V DC</td><td>Equals 1 V DC output.</td></tr><tr><td>0-5 V DC, 1-5V DC</td><td>Equals 5 V DC output.</td></tr><tr><td>0-10 V DC</td><td>Equals 10 V DC output.</td></tr></table>• Setting range: Transmission output 1 low limit to Input range high limit (The placement of the decimal point follows the selection or input range.)</td></tr>
<tr><td>rrL1
-200</td><td>Transmission output 1 low limit
• Sets the Transmission output 1 low limit value.
Standard
<table><tr><td>4-20 mA DC</td><td>Equals 4 mA DC output.</td></tr></table>Optional
<table><tr><td>0-20 mA DC</td><td>Equals 0 mA DC output.</td></tr><tr><td>0-1 V DC, 0-5 V DC, 0-10 V DC</td><td>Equals 0 V DC output.</td></tr><tr><td>1-5 V DC</td><td>Equals 1 V DC output.</td></tr></table>• Setting range: Input range low limit to Transmission output 1 high limit (The placement of the decimal point follows the selection or input range.)</td></tr>
<tr><td>rrH2
1370</td><td>Transmission output 2 high limit
• Sets the Transmission output 2 high limit value.
Available when Transmission output 2 (T□2 option) is ordered.
<table><tr><td>4-20 mA DC</td><td>Equals 20 mA DC output.</td></tr><tr><td>0-20 mA DC</td><td>Equals 20 mA DC output.</td></tr><tr><td>0-1 V DC</td><td>Equals 1 V DC output.</td></tr><tr><td>0-5 V DC, 1-5V DC</td><td>Equals 5 V DC output.</td></tr><tr><td>0-10 V DC</td><td>Equals 10 V DC output.</td></tr></table>• Setting range: Transmission output 2 low limit to Input range high limit (The placement of the decimal point follows the selection or input range.)</td></tr>
</table>

<table>
<tr><th>Character
Factory Default</th><th>Setting Item, Function, Setting Range</th></tr>
<tr><td>TrL2
-200</td><td>
Transmission output 2 low limit
• Sets the Transmission output 2 low limit value.
Available when Transmission output 2 (T□2 option) is ordered.
<table>
<tr><td>4-20 mA DC</td><td>Equals 4 mA DC output.</td></tr>
<tr><td>0-20 mA DC</td><td>Equals 0 mA DC output.</td></tr>
<tr><td>0-1 V DC, 0-5 V DC,
0-10 V DC</td><td>Equals 0 V DC output.</td></tr>
<tr><td>1-5 V DC</td><td>Equals 1 V DC output.</td></tr>
</table>
• Setting range: Input range low limit to Transmission output 2 high limit (The placement of the decimal point follows the selection or input range.)
</td></tr>
<tr><td>HoLd
HoLd</td><td>
Event input function
• Selects Event input function.
Not available if Serial communication (C5 option) is ordered.
• HoLd (HOLD):
PV at the given time is held and indicated by closing Event input terminals (14, 17). The HOLD function is cancelled by opening the Event input terminals (14, 17).
P_H□ (Peak HOLD):
The updated maximum PV is indicated by closing Event input terminals (14, 17). The Peak HOLD function is cancelled by opening the Event input terminals (14, 17).
b_H□ (Bottom HOLD):
The updated minimum PV is indicated by closing Event input terminals (14, 17). The Bottom HOLD function is cancelled by opening Event input terminals (14, 17).
HLd1 (Alarm HOLD 1):
If any of [A1 HOLD function] to [A4 HOLD function] is set to “Enabled”, and if the alarm is ON, the alarm will be maintained by closing Event input terminals (14, 17).
The Alarm HOLD function will be cancelled by opening Event input terminals (14, 17). While the Event input terminals (14, 17) are open, the Alarm HOLD function will be disabled.
HLd2 (Alarm HOLD 2):
If any of [A1 HOLD function] to [A4 HOLD function] is set to “Enabled”, and if the alarm is ON, the alarm will be maintained by opening the Event input terminals (14, 17).
The Alarm HOLD function will be cancelled by closing Event input terminals (14, 17). While the Event input terminals (14, 17) are closed, the Alarm HOLD function will be disabled.
</td></tr>
<tr><td>A1Hd
nonE</td><td>
A1 HOLD function
• Enables/Disables the A1 HOLD function.
Not available if No alarm action is selected in [A1 type].
• If A1 HOLD function is set to “Enabled”, and if the alarm is ON, the alarm output ON status will be maintained until the following is conducted.
• The FAST key is pressed for approx. 3 seconds.
• The power is turned OFF.
• The HOLD is cancelled by the Event input function.
During A1 HOLD, the A1 action indicator flashes.
• nonE : Disabled
HoLd : Enabled
</td></tr>
</table>

Character Factory Default	Setting Item, Function, Setting Range
A2Hd nonE	**A2 HOLD function** • Enables/Disables the A2 HOLD function. Not available if No alarm action is selected in [A2 type]. Not available if Insulated power output (P24 option or P5 option) is ordered. • If A2 HOLD function is set to “Enabled”, and if the alarm is ON, the alarm output ON status will be maintained until the following is conducted. • The FAST key is pressed for approx. 3 seconds. • The power is turned OFF. • The HOLD is cancelled by the Event input function. During A2 HOLD, the A2 action indicator flashes. • nonE : Disabled HoLd: Enabled
A3Hd nonE	**A3 HOLD function** • Enables/Disables the A3 HOLD function. Not available if No alarm action or High/Low limit range alarm is selected in [A3 type]. • If A3 HOLD function is set to “Enabled”, and if the alarm is ON, the alarm output ON status will be maintained until the following is conducted. • The FAST key is pressed for approx. 3 seconds. • The power is turned OFF. • The HOLD is cancelled by the Event input function. During A3 HOLD, the A3 action indicator flashes. • nonE: Disabled HoLd: Enabled
A4Hd nonE	**A4 HOLD function** • Enables/Disables the A4 HOLD function. Available when Alarm 4 output (A4 option) is ordered. Not available if No alarm action is selected in [A4 type]. • If A4 HOLD function is set to “Enabled”, and if the alarm is ON, the alarm output ON status will be maintained until the following is conducted. • The FAST key is pressed for approx. 3 seconds. • The power is turned OFF. • The HOLD is cancelled by the Event input function. During A4 HOLD, the A4 action indicator flashes. • nonE : Disabled HoLd: Enabled
rooT nonE	**Square root function** • Enables/Disables the square root extraction function. • Indication value or square root extraction value is expressed by the formula below. $PV' = \sqrt{PV}$ PV': Indication value, square root extraction value PV: Process variable • nonE: Disabled USE□: Enabled
LcUT □□ 1.0	**Low level cutoff** • Sets the low level cutoff value. • When PV input is near 0 (zero), the result of square root extraction changes considerably with only a very small change of input. In this case, the PV is forced to become 0 (zero). If PV input is lower than the low level cutoff value, the PV will become 0. • Setting range: 0.0 to 25.0% of input range (e.g.) Input: 4-20 mA DC, Scaling range: 0-100 Low level cutoff: 1.0% In this case, PV becomes 0 if it is lower than 1.0%. 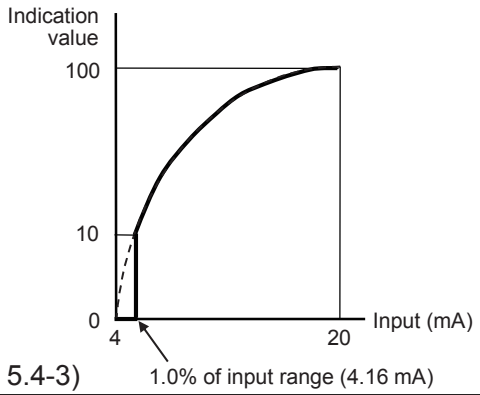 (Fig. 5.4-3)

5.5 Maintenance Mode

To enter Maintenance mode, press the **UP** and **FAST keys** (in that order) together for approx. 5 seconds in PV/SV Display Mode.

If the unit enters Maintenance mode, all outputs are forced to turn OFF.

Character Factory Default	Setting Item, Function, Setting Range
A□A1 oFF□	**A1 output ON/OFF** • A1 output can be turned ON by the UP key, and OFF by the DOWN key. Not available if No alarm action is selected in [A1 type]. • oFF□: Output OFF on□□: Output ON
A□A2 oFF□	**A2 output ON/OFF** • A2 output can be turned ON by the UP key, and OFF by the DOWN key. Not available if No alarm action is selected in [A2 type]. Not available if Insulated power output (P24 option or P5 option) is ordered. • oFF□: Output OFF on□□: Output ON
A□A3 oFF□	**A3 output ON/OFF** • A3 output can be turned ON by the UP key, and OFF by the DOWN key. Not available if No alarm action or High/Low limit range alarm is selected in [A3 type]. • oFF□: Output OFF on□□: Output ON
A□A4 oFF□	**A4 output ON/OFF** • A4 output can be turned ON by the UP key, and OFF by the DOWN key. Available when Alarm 4 output (A4 option) is ordered. Not available if No alarm action is selected in [A4 type]. • oFF□: Output OFF on□□: Output ON
A□T1 □□0.0	**Transmission output 1 manual output** • Sets output amount of Transmission output 1. • Setting range: 0.0 to 100.0%
A□T2 □□0.0	**Transmission output 2 manual output** • Sets output amount of Transmission output 2. Available when Transmission output 2 (T□2 option) is ordered. • Setting range: 0.0 to 100.0%

6. Operation

6.1 Operation

After the JIR-301-M is mounted to the control panel and wiring is completed, operate the unit following the procedure below.

(1) Turn the power supply to the JIR-301-M ON.
For approximate 3 sec after the power is switched ON, the input characters and the temperature unit are indicated on the PV Display, and input range high limit (thermocouple, RTD input) or scaling high limit (Direct current, DC voltage input) is indicated on the SV Display. See (Table 5-1) (p.13).
During this time, all outputs and LED indicators are in an OFF status.
After that, Indication starts, indicating PV on the PV Display, and A1, A2, A3 or A4 value on the SV Display.

(2) Enter each set value.
Enter each set value, referring to Section “5. Setup”.

6.2 Switching SV Display Indication

To change indication on the SV Display, press the UP and MODE keys (in that order) together in the PV/SV Display Mode. The next alarm value (of the currently indicated A1-A4 value) will be displayed.
If the UP and MODE keys (in that order) are pressed together at [A4 value indication], the unit reverts to [A1 value indication].

Indication	Setting Item, Function
PV A1 value	**A1 value indication** • Indicates A1 value on the SV Display, and the A1 value indicator is lit. Not available if No alarm action is selected in [A1 type].
PV A2 value	**A2 value indication** • Indicates A2 value on the SV Display, and the A2 value indicator is lit. Not available if No alarm action is selected in [A2 type]. Not available if Insulated power output (P24 option or P5 option) is ordered.
PV A3 value	**A3 value indication** • Indicates A3 value on the SV Display, and the A3 value indicator is lit. Not available if No alarm action or High/Low limit range alarm is selected in [A3 type].
PV A4 value	**A4 value indication** • Indicates A4 value on the SV Display, and the A4 value indicator is lit. If High/Low limit range alarm is selected in [A4 type], the SV Display indicates A4 low limit value. While the UP key is pressed, the SV Display indicates A4 high limit value. • Available when Alarm 4 output (A4 option) is ordered. Not available if No alarm action is selected in [A4 type].

6.3 How to Use the Alarm Output

(e.g.) To use A1 output, follow the procedure below.

(1) Select an A1 type in [A1 type] (p.19) in Auxiliary function setting mode 2.
(2) Set the following items in Auxiliary function setting mode 2 if required:
A1 Energized/De-energized (p.20), A1 hysteresis (p.21),
A1 delay time (p.21), A1 HOLD function (p.23)
(3) Set the A1 value in [A1 value (p.14)] in Alarm setting mode.

A1 output settings are complete.

The same applies to A2, A3 and A4 output.

6.4 How to Use the Event Input Function

(e.g.) To use Peak HOLD of the Event input function, follow the procedure below.

(1) Select Peak HOLD in [Event input function (p.23)] in Auxiliary function setting mode 2.
(2) The updated maximum PV is indicated by closing Event input terminals (14, 17).
The Peak HOLD function is cancelled by opening Event input terminals (14, 17).

7. Alarm Action

7.1 High Limit Alarm, Low Limit Alarm

	High limit alarm	Low limit alarm
A1 action	A1 hysteresis ON OFF A1 value	A1 hysteresis ON OFF A1 value
A1 output		
	High limit with standby alarm	Low limit with standby alarm
A1 action	A1 hysteresis ON OFF A1 value	A1 hysteresis ON OFF A1 value
A1 output		

: A1 output terminals (7, 8) ON

: A1 output terminals (7, 8) ON or OFF

: A1 output terminals (7, 8) OFF

: A1 output is in standby.

• The following terminal numbers are used for respective alarm outputs.
  A2 output terminals: 9, 10
  A3 output terminals: 12, 13
  A4 output terminals: 15, 16

• A1, A2, A3 or A4 action indicator is lit when each output terminals are ON.
  A1, A2, A3 or A4 action indicator is turned off when its output terminals are OFF.

7.2 A3 High/Low Limit Range Alarm Action

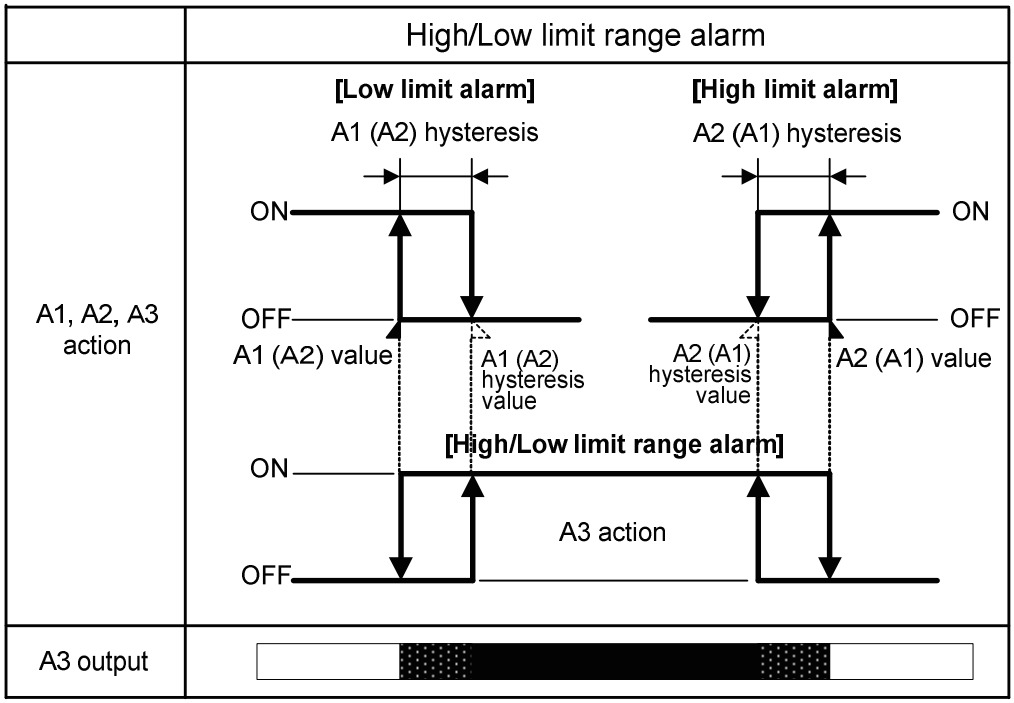

: A1 output terminals (7, 8): OFF, A2 output terminals (9, 10): OFF, A3 output terminals (12, 13): ON

: A1 output terminals (7, 8), A2 output terminals (9, 10) and A3 output terminals (12, 13): ON or OFF

: A1 output terminals (7, 8): ON, A2 output terminals (9, 10): ON, A3 output terminals (12, 13): OFF

A3 High/Low limit range alarm action is determined by setting A1 value and A2 value.
A3 is activated (ON) when both A1 and A2 are OFF – by combining A1 High limit alarm (or High limit with standby alarm) and A2 Low limit alarm (or Low limit with standby alarm) and vice versa.
When standby function, hysteresis or delay time for A1 and A2 are set, check the below A3 action.

Please note the following:

- If A1 or A2 with standby alarm is selected, A3 is turned ON while A1 or A2 is in standby.
- If A1 or A2 hysteresis increases, A3 ON span decreases.
- When A1 or A2 delay time (setting time) increases, A3 ON time increases.
- If A1 or A2 delay time (setting time) is set, while A1 or A2 delay time is working (when power to the instrument is turned ON), A3 is turned ON.

7.3 A4 High/Low Limit Range Alarm Action

When High/Low limit range alarm is selected in [A4 type]:

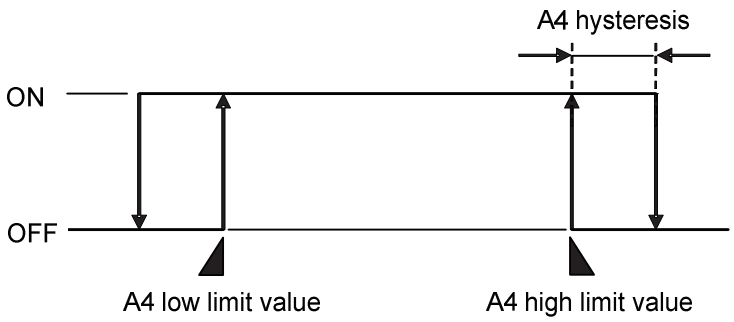

(Fig. 7.3-1)

8. Specifications

8.1 Standard Specifications

Rating

Input	Thermo-couple	K, J, R, S, B, E, T, N, PL-Ⅱ, C(W/Re5-26) External resistance: 100 Ω max. (However, B input: 40 Ω max.)
	RTD	Pt100, JPt100 3-wire type Allowable input lead wire resistance: 10 Ω max. per wire
	Direct current	0-20 mA DC, 4-20 mA DC (Select an externally mounted shunt resistor or a built-in shunt resistor.) Input impedance: 50 Ω Allowable input current: 50 mA DC max.
	DC voltage	0-1 V DC Input impedance: 1 MΩ min. Allowable input voltage: 5 V DC max. Allowable signal source resistance: 2 kΩ max. 0-5 V DC, 1-5 V DC, 0-10 V DC Input impedance: 100 kΩ min. Allowable input voltage: 15 V DC max. Allowable signal source resistance: 100 Ω max.

Power supply voltage			
	Model	JIR-301-M	JIR-301-M 1
	Power supply voltage	100 to 240 V AC 50/60Hz	24 V AC/DC 50/60Hz
	Allowable voltage fluctuation range	85 to 264 V AC	20 to 28 V AC/DC

General Structure

Dimensions	96 x 48 x 100 mm (W x H x D)
Mounting	Flush (Mountable panel thickness: 1 to 8 mm)
Material	Case: Flame-resistant resin, Color: Light gray
Drip-proof/Dust-proof	IP66 (for front panel only)
Setting method	Input system using membrane sheet key
Display	PV Display: Red LED 5-digits, Character size, 16 x 7.2 mm (H x W) SV Display: Green LED 5-digits, Character size, 10 x 4.8 mm (H x W)

Indication Performance

Indication accuracy	Thermocouple	Within ±0.2% of each input span ±1 digit, or within ±2℃ (4℉), whichever is greater However, R, S input, 0 to 200℃ (32 to 392℉): Within ±6℃ (12℉) B input, 0 to 300℃ (32 to 572℉): Accuracy is not guaranteed. K, J, E, T, N input, Less than 0℃ (32℉): Within ±0.4% of each input span ±1 digit
	RTD	Within ±0.1% of each input span±1 digit, or within ±1℃ (2℉), Whichever is greater
	Direct current, DC voltage	Within ±0.2% of each input span ±1 digit
Input sampling period		125 ms

Standard Function

<table>
<tr><td>A1 output,
A2 output,
A3 output</td><td>The alarm action point can be set at random (process alarm), and if the input reaches the randomly set action point, the alarm output turns ON or OFF corresponding to the alarm type and Energized/De-energized selection.
The alarm type can be selected from; No alarm action, High limit alarm, Low limit alarm, High limit with standby alarm, Low limit with standby alarm and High/Low limit range alarm (for A3 output only).
High/Low limit range alarm can be selected when A1 High limit alarm (High limit with standby alarm) and A2 Low limit alarm (Low limit with standby alarm) are combined, or when A1 Low limit alarm (Low limit with standby alarm) and A2 High limit alarm (High limit with standby alarm) are combined.
<table>
<tr><td>Action</td><td>ON/OFF action</td></tr>
<tr><td>Hysteresis</td><td>0.1 to 100.0℃ (℉)
Direct current, DC voltage input: 1 to 1000 (The placement of the decimal point follows the selection.)</td></tr>
<tr><td>Alarm HOLD function</td><td>Enables/Disables the Alarm HOLD function.
If Alarm HOLD function is set to “Enabled”, and if the alarm is ON, the alarm output ON status will be maintained until the following is conducted.
• The FAST key is pressed for approx. 3 seconds.
• The power is turned OFF.
• The HOLD is cancelled by the Event input function.
During Alarm HOLD, corresponding alarm action indicator flashes.</td></tr>
<tr><td>Output</td><td>Relay contact 1a
Control capacity: 3 A 250 V AC (resistive load)
Electrical life: 100,000 cycles</td></tr>
</table></td></tr>
<tr><td>Transmission output 1</td><td>Converting the PV to analog signal every 125 ms, outputs the value in direct current. (Unaffected by the HOLD function) (When using the Transmission output 1 value as an input for other instruments, check that the input impedance of these instruments is smaller than the maximum load resistance of Transmission output 1.)
<table>
<tr><td>Resolution</td><td>12000</td></tr>
<tr><td>Direct current</td><td>4 to 20 mA DC (Load resistance: Max. 550 Ω)</td></tr>
<tr><td>Output accuracy</td><td>Within ±0.3% of transmission output span</td></tr>
<tr><td>Response time</td><td>400 ms+ Input sampling period (0%→90%)</td></tr>
</table></td></tr>
</table>

Insulation, Dielectric Strength

<table>
<tr><td>Circuit insulation configuration</td><td> 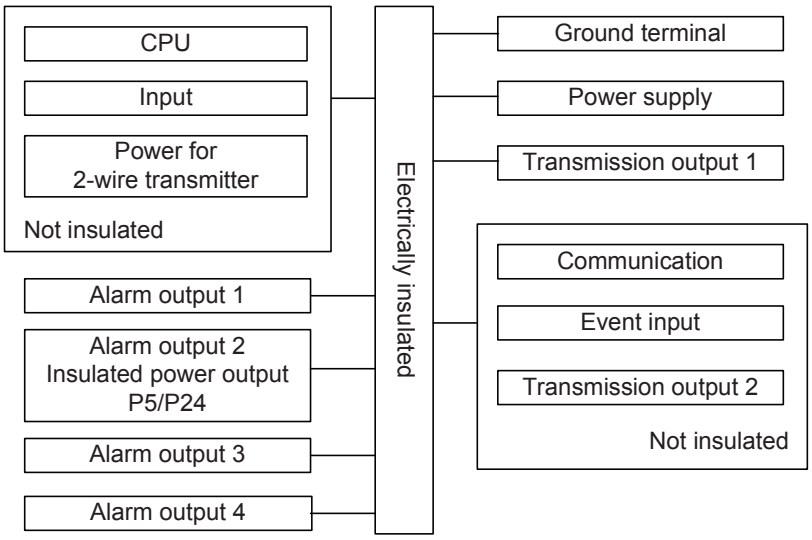
</td></tr>
<tr><td>Insulation resistance</td><td>10 MΩ or more, at 500 V DC</td></tr>
</table>

Dielectric strength	Input terminal and ground terminal: 1.5 kV AC for 1 minute Input terminal and power terminal: 1.5 kV AC for 1 minute Power terminal and ground terminal: 1.5 kV AC for 1 minute Output terminal and ground terminal: 1.5 kV AC for 1 minute Output terminal and power terminal: 1.5 kV AC for 1 minute (Output terminals: A1, A2, A3 and A4 output terminals, Transmission output 1 terminals, Transmission output 2 terminals and communication terminals)

Attached Function

Burnout	When the thermocouple or RTD input is burnt out, the PV Display flashes [illegible].
Input error indication	

Indication	Contents
[illegible] flashes.	Overscale: Measured value has exceeded indication range high limit.
[illegible] flashes.	Underscale: Measured value has dropped below indication range low limit.

• **Thermocouple, RTD input**

Input	Input Range	Indication Range
K	-200 to 1370℃	-250 to 1420℃
	-320 to 2500℉	-420 to 2600℉
	-200.0 to 400.0℃	-200.0 to 450.0℃
	-200.0 to 750.0℉	-200.0 to 850.0℉
J	-200 to 1000℃	-250 to 1050℃
	-320 to 1800℉	-420 to 1900℉
R	0 to 1760℃	-50 to 1810℃
	0 to 3200℉	-100 to 3300℉
S	0 to 1760℃	-50 to 1810℃
	0 to 3200℉	-100 to 3300℉
B	0 to 1820℃	-50 to 1870℃
	0 to 3300℉	-100 to 3400℉
E	-200 to 800℃	-250 to 850℃
	-320 to 1500℉	-420 to 1600℉
T	-200.0 to 400.0℃	-200.0 to 450.0℃
	-200.0 to 750.0℉	-200.0 to 850.0℉
N	-200 to 1300℃	-250 to 1350℃
	-320 to 2300℉	-420 to 2400℉
PL-Ⅱ	0 to 1390℃	-50 to 1440℃
	0 to 2500℉	-100 to 2600℉
C(W/Re5-26)	0 to 2315℃	-50 to 2365℃
	0 to 4200℉	-100 to 4300℉
Pt100	-200.0 to 850.0℃	-200.0 to 900.0℃
	-200.0 to 1000.0℉	-200.0 to 1100.0℉
	-200 to 850℃	-210 to 900℃
	-300 to 1500℉	-318 to 1600℉
JPt100	-200.0 to 500.0℃	-200.0 to 550.0℃
	-200.0 to 900.0℉	-200.0 to 1000.0℉
	-200 to 500℃	-207 to 550℃
	-300 to 900℉	-312 to 1000℉

Input error indication	**• Direct current, DC voltage input** If measured value exceeds Indication range high limit value, the PV Display flashes [illegible], and if measured value drops below the Indication range low limit value, the PV Display flashes [illegible]. Indication range: [Scaling low limit value – Scaling span x 1%] to [Scaling high limit value + Scaling span x 10%] (When the range is outside of -1999 to 9999, [illegible] or [illegible] flashes.) **DC input disconnection:** When DC input is disconnected, the PV Display flashes [illegible] for 4 to 20 mA DC and 1 to 5 V DC input, and [illegible] for 0 to 1 V DC input. For 0 to 20 mA DC, 0 to 5 V DC and 0 to 10 V DC input, the PV Display indicates the value corresponding with 0 mA or 0 V.
Set value lock	Locks the set values to prevent setting errors. (p.15)
Sensor correction coefficient	Sets slope of input value from a sensor.
Sensor correction	Corrects the input value from a sensor. (p.15)
Power failure countermeasure	The setting data is backed up in the non-volatile IC memory.
Self-diagnosis	The CPU is monitored by a watchdog timer, and if an abnormal status is found on the CPU, the JIR-301-M is switched to warm-up status.
Automatic cold junction temp. compensation	This detects the temperature at the connecting terminal between the thermocouple and the instrument, and always maintains it at the same status as if the reference junction location temperature was at 0℃ (32℉).
Event input function	Selects Event input function from 3 types of HOLD function and 2 types of Alarm HOLD function. Not available if Serial communication (C5 option) is ordered.

HOLD	PV (indicated value only) at the given time is held and indicated by closing Event input terminals (14, 17). The HOLD function is cancelled by opening Event input terminals (14, 17).
Peak HOLD	The updated maximum PV is indicated by closing Event input terminals (14, 17). The Peak HOLD function is cancelled by opening Event input terminals (14, 17).
Bottom HOLD	The updated minimum PV is indicated by closing Event input terminals (14, 17). The Bottom HOLD function is cancelled by opening Event input terminals (14, 17).
Alarm HOLD 1	If any of [A1 HOLD function] to [A4 HOLD function] is set to “Enabled”, and if the alarm is ON, the alarm will be maintained by closing Event input terminals (14, 17). The alarm HOLD function will be cancelled by opening Event input terminals (14, 17). While Event input terminals (14, 17) are open, the alarm HOLD function will be disabled.
Alarm HOLD 2	If any of [A1 HOLD function] to [A4 HOLD function] is set to “Enabled”, and if the alarm is ON, the alarm will be maintained by opening Event input terminals (14, 17). The alarm HOLD function will be cancelled by closing Event input terminals (14, 17). While Event input terminals (14, 17) are closed, the alarm HOLD function will be disabled.

Warm-up indication	After power is turned ON, the input characters and temperature unit will be indicated on the PV Display, and the input range high limit (for thermocouple, RTD input) or scaling high limit (for direct current, DC voltage input) will be indicated on the SV Display for approx. 3 sec.

Other

Power consumption	

Supply Voltage	Power Consumption
100 to 240 V AC	Approx. 8 VA (When maximum options are ordered: Approx.10 VA)
24 V AC	Approx. 6 VA (When maximum options are ordered: Approx.9 VA)
24 V DC	Approx. 4 W (When maximum options are ordered: Approx.7 W)

Ambient temperature	0 to 50℃ (32 to 122℉)
Ambient humidity	35 to 85 %RH (non-condensing)
Weight	Approx. 300 g
Accessories	Screw type mounting brackets (1 set), Instruction manual excerpt (1 copy), Unit label (1 label), Terminal cover (1 piece, When the TC option is ordered)

8.2 Optional Specifications

Serial communication (C5 option)

When the C5 option is ordered, the Event input function cannot be used.
The following operations can be carried out from an external computer.

- Reading and setting of various set values
- Reading of PV and action status
- Function change

Communication line	EIA RS-485
Communication method	Half-duplex communication
Communication speed	2400, 4800, 9600, 19200, 38400 bps
Synchronization method	Start-stop synchronization
Parity	Even, Odd , No parity (Selectable by keypad)
Stop bit	1, 2 (Selectable by keypad)
Communication protocol	Shinko protocol, Modbus ASCII, Modbus RTU In addition, each protocol above is available with Block read. (Selectable by keypad)
Connectable number of units	Maximum 31 units to 1 host computer
Communication error detection	Double detection by parity and checksum

Data format

Communication protocol	Shinko protocol	Modbus ASCII	Modbus RTU
Start bit	1	1	1
Data bit (*1)	7	7	8
Parity	Even	Selection [Even] (*2)	Selection [No parity] (*2)
Stop bit	1	Selection [1] (*2)	Selection [1] (*2)

(*1) Data bit is automatically selected upon selecting the communication protocol.
(*2) [ ]: Basic set value

Alarm 4 output (A4 option)

This option and Transmission output 2 (T□2 option) cannot be used together.
Alarm type, alarm action and alarm output are the same as those of A1, A2 and A3 output except High/Low limit range alarm.

<table>
<tr><td>Insulated power output
(P24 option)</td><td>If this option is ordered, the A2 function will be disabled.
This option cannot be used with the Insulated power output (P5 option) together, or cannot be used with Power for 2-wire transmitter (DSB option) together.
<table>
<tr><td>Output voltage</td><td>24±3 V DC (When load current is 30 mA)</td></tr>
<tr><td>Ripple voltage</td><td>Within 200 mV DC (When load current is 30 mA)</td></tr>
<tr><td>Max load current</td><td>30 mA DC</td></tr>
</table></td></tr>
<tr><td>Insulated power output
(P5 option)</td><td>If this option is ordered, the A2 function will be disabled.
This option cannot be used with the Insulated power output (P24 option) together, or cannot be used with Power for 2-wire transmitter (DSB option) together.
<table>
<tr><td>Output voltage</td><td>5±0.5 V DC (When load current is 30 mA)</td></tr>
<tr><td>Ripple voltage</td><td>Within 200 mV DC (When load current is 30 mA)</td></tr>
<tr><td>Max load current</td><td>30 mA DC</td></tr>
</table></td></tr>
<tr><td>Power for 2-wire transmitter
(DSB option)</td><td>If this option is ordered, only 4 to 20 mA DC input (Built-in 50 Ω shunt resistor) can be used.
This option cannot be used with the Insulated power output (P24 option or P5 option) together.
<table>
<tr><td>Output voltage</td><td>24±3 V DC (When load current is 30 mA)</td></tr>
<tr><td>Ripple voltage</td><td>Within 200 mV DC (When load current is 30 mA)</td></tr>
<tr><td>Max load current</td><td>30 mA DC</td></tr>
</table></td></tr>
<tr><td>Transmission output 2
(T□2 option)</td><td>This option cannot be used with Alarm 4 output (A4 option) together.
<table>
<tr><td>Resolution</td><td>12000</td></tr>
<tr><td>Output accuracy</td><td>Within ±0.3% of transmission output span</td></tr>
<tr><td>Response time</td><td>400 ms + Input sampling period (0%→90%)</td></tr>
</table>
<table>
<tr><th>Option Code</th><th colspan="2">Transmission Output Type</th></tr>
<tr><td>TA2 (4-20)</td><td rowspan="2">Direct current</td><td>4 to 20 mA DC (Load resistance: Max 550 Ω)</td></tr>
<tr><td>TA2 (0-20)</td><td>0 to 20 mA DC (Load resistance: Max 550 Ω)</td></tr>
<tr><td>TV2 (0-1)</td><td rowspan="4">DC voltage</td><td>0 to 1 V DC (Load resistance: Minimum 100 kΩ)</td></tr>
<tr><td>TV2 (0-5)</td><td>0 to 5 V DC (Load resistance: Minimum 500 kΩ)</td></tr>
<tr><td>TV2 (1-5)</td><td>1 to 5 V DC (Load resistance: Minimum 500 kΩ)</td></tr>
<tr><td>TV2 (0-10)</td><td>0 to 10 V DC (Load resistance: Minimum 1 MΩ)</td></tr>
</table></td></tr>
<tr><td>User specified Transmission output
(TA, TV option)</td><td>Standard Transmission output can be changed to the following ‘User specified Transmission output’.
<table>
<tr><th>Option Code</th><th colspan="2">Transmission Output Type</th></tr>
<tr><td>TA (0-20)</td><td>Direct current</td><td>0 to 20 mA DC (Load resistance: Max 550 Ω)</td></tr>
<tr><td>TV (0-1)</td><td rowspan="4">DC voltage</td><td>0 to 1 V DC (Load resistance: Minimum 100 kΩ)</td></tr>
<tr><td>TV (0-5)</td><td>0 to 5 V DC (Load resistance: Minimum 500 kΩ)</td></tr>
<tr><td>TV (1-5)</td><td>1 to 5 V DC (Load resistance: Minimum 500 kΩ)</td></tr>
<tr><td>TV (0-10)</td><td>0 to 10 V DC (Load resistance: Minimum 1 MΩ)</td></tr>
</table></td></tr>
<tr><td>Color Black
(BK option)</td><td>Panel: Dark gray
Case: Black</td></tr>
<tr><td>Terminal cover
(TC option)</td><td>Electrical shock protection terminal cover</td></tr>
</table>

9. Troubleshooting

If any malfunctions occur, refer to the following items after checking that power is being supplied to the JIR-301-M.

Problem	Possible Cause	Solution
The PV Display indicates Err 1.	Internal memory is defective.	Contact us or our agency in your region.
The PV Display indicates [illegible].	Burnout of thermocouple, RTD or disconnection of DC voltage (0 to 1 V DC)	Replace each sensor. **How to check whether the sensor is burnt out** **[Thermocouple]** If the input terminals of the instrument are shorted, and if a value around room temperature is indicated, the instrument is likely to be operating normally, however, the sensor may be burnt out. **[RTD]** If approx. 100 Ω of resistance is connected to the input terminals between A-B of the instrument and between B-B is shorted, and if a value around 0℃ (32℉) is indicated, the instrument is likely to be operating normally, however, the sensor may be burnt out. **[DC voltage (0 to 1 V DC)]** If the input terminals of the instrument are shorted, and if a scaling low limit value is indicated, the instrument is likely to be operating normally, however, the signal wire may be disconnected.
	Check whether the input terminals of thermocouple, RTD or DC voltage (0 to 1 V DC) are securely connected to the instrument input terminals.	Connect the sensor terminals to the instrument input terminals securely.
The PV Display flashes [illegible].	Check whether input signal wire for DC voltage (1 to 5 V DC) or direct current (4 to 20 mA DC) is disconnected.	**How to check whether the input signal wire is disconnected** **[DC voltage (1 to 5 V DC)]** If the input to the input terminals of the instrument is 1 V DC and if a scaling low limit value is indicated, the instrument is likely to be operating normally, however, the signal wire may be disconnected. **[Direct current (4 to 20 mA DC)]** If the input to the input terminals of the instrument is 4 mA DC and if a scaling low limit value is indicated, the instrument is likely to be operating normally, however, the signal wire may be disconnected.
	Check whether input signal wire for DC voltage (1 to 5 V DC) or direct current (4 to 20 mA DC) is securely connected to the instrument input terminals.	Ensure that the input signal wire is securely connected to the instrument input terminals.
	Check if polarity of thermo-couple or compensating lead wire is correct. Check whether codes (A, B, B) of RTD agree with the instrument terminals.	Wire them correctly.

Problem	Possible Cause	Solution
The PV Display keeps indicating the value set in [Scaling low limit].	Check whether the input signal wires of DC voltage (0 to 5 V DC, 0 to 10 V DC) and direct current (0 to 20 mA DC) is disconnected.	**How to check whether the input signal wire is disconnected** **[DC voltage (0 to 5 V DC, 0 to 10 V DC)]** If the input to the input terminal of this instrument is 1 V DC, and if a value corresponding to 1 V DC is indicated, the instrument is likely to be operating normally, however, the input signal wire may be disconnected. **[Direct current (0 to 20 mA DC)]** If the input to the input terminal of this instrument is 4 mA DC, and if a value (converted value from scaling high, low limit setting) corresponding to 4 mA DC is indicated, the instrument is likely to be operating normally, however, the input signal wire may be disconnected.
	Check whether the input terminals of DC voltage (0 to 5 V DC, 0 to 10 V DC) or direct current (0 to 20 mA DC) are securely connected to the instrument input terminals.	Connect the input terminals of DC voltage and current to the input terminals of this instrument securely.
The indication of PV Display is irregular or unstable.	Check whether sensor input or temperature unit (℃ or ℉) is correct.	Select the sensor input and temperature unit (℃ or ℉) correctly.
	Sensor correction coefficient or Sensor correction value is unsuitable.	Set them to suitable values.
	Check whether the sensor specification is correct.	Use a sensor with appropriate specifications.
	AC leaks into the sensor circuit.	Use an ungrounded type sensor.
	There may be equipment that interferes with or makes noise near the instrument.	Keep the instrument clear of any potentially disruptive equipment.
Values on the PV Display do not change.	Terminals 14 and 17 are closed, and the HOLD function is working.	Cancel the HOLD function by opening terminals 14 and 17.
Even if the UP key or DOWN key is pressed, values do not change.	Set value lock (Lock 1 or Lock 2) is selected.	Release the lock in [Set value lock].

10. Character Table

Depending on the model and setting contents, some setting items do not appear.

10.1 Alarm Setting Mode

If the MODE key is pressed in PV/SV Display Mode, the unit will move to Alarm setting mode.

Character Factory Default	Setting Item, Function, Setting Range
A 1 0	**A1 value** • Refer to (Table 10.1-1).
A2 0	**A2 value** • Refer to (Table 10.1-1).
A3 0	**A3 value** • Refer to (Table 10.1-1).
A4 0	**A4 value** • Refer to (Table 10.1-1).
A4H 0	**A4 high limit value** • Refer to (Table 10.1-1).

(Table 10.1-1)

Alarm Type	Setting Range
High limit alarm	Input range low limit to input range high limit (*1)
Low limit alarm	Input range low limit to input range high limit (*1)
High limit with standby alarm	Input range low limit to input range high limit (*1)
Low limit with standby alarm	Input range low limit to input range high limit (*1)
High/Low limit range alarm (A4)	A4 low limit value: Input range low limit (*2) to A4 high limit A4 high limit value: A4 low limit to input range high limit (*3)

• The placement of the decimal point follows the selection or input range.

(*1) For direct current and DC voltage input: Setting range is [Scaling low limit to Scaling high limit].
(*2) For direct current and DC voltage input: Will be substituted by the Scaling low limit.
(*3) For direct current and DC voltage input: Will be substituted by the Scaling high limit.

10.2 Auxiliary Function Setting Mode 1

To enter Auxiliary Function Setting Mode 1, press and hold the DOWN key and MODE key (in that order) together for approx. 3 seconds in PV/SV Display Mode.

Character Factory Default	Setting Item, Function, Setting Range
Lock ----	**Set value lock** • ---- (Unlock): All set values can be changed. Loc 1 (Lock 1): None of the set values can be changed. Loc2 (Lock 2): Only Alarm setting mode (p.14) can be changed. Loc3 (Lock 3): All set values – except the input type (p.18) – can be changed. However, changed values revert to their previous value after power is turned off because they are not saved in the non-volatile IC memory. Do not change any setting items in Auxiliary function setting mode 2 (pp.18 - 24). If any item is changed in Auxiliary function setting mode 2, it will affect the alarm value (A1 value - A4 value).
hot□ 1.000	**Sensor correction coefficient** • Setting range: -10.000 to 10.000
ho□□ □□0.0	**Sensor correction** • Setting range: -1000.0 to 1000.0℃ (℉) Direct current, DC voltage input: -10000 to 10000 (The placement of the decimal point follows the selection.)
chhL nohL	**Communication protocol** • nohL : Shinko protocol hodA : Modbus ASCII mode hodr : Modbus RTU mode bnhL : Shinko protocol (Block read available) bhdA : Modbus ASCII mode (Block read available) bhdr : Modbus RTU mode (Block read available)
chno □□□0	**Instrument number** • Setting range: 0 to 95
chhP □□96	**Communication speed** • □□24 : 2400 bps □□48 : 4800 bps □□96 : 9600 bps □ 192 : 19200 bps □384 : 38400 bps
chPr EvEn	**Parity** • nonE : No parity EvEn : Even odd□ : Odd
chhF □□□1	**Stop bit** • □□□1 : 1 bit □□□2 : 2 bits

10.3 Auxiliary Function Setting Mode 2

To enter Auxiliary Function Setting Mode 2, press and hold the UP, DOWN and MODE keys (in that order) together for approx. 3 seconds in PV/SV Display Mode.

Character Factory Default	Setting Item, Function, Setting Range
SEnS tc C	**Input type** (Table 10.3-1)

Character	Input Range	Character	Input Range
tc C	K -200 to 1370℃	tc F	K -320 to 2500℉
tc .C	K -200.0 to 400.0℃	tc .F	K -200.0 to 750.0℉
JC C	J -200 to 1000℃	JC F	J -320 to 1800℉
rC C	R 0 to 1760℃	rC F	R 0 to 3200℉
SC C	S 0 to 1760℃	SC F	S 0 to 3200℉
bC C	B 0 to 1820℃	bC F	B 0 to 3300℉
EC C	E -200 to 800℃	EC F	E -320 to 1500℉
T .C	T -200.0 to 400.0℃	T .F	T -200.0 to 750.0℉
nC C	N -200 to 1300℃	nC F	N -320 to 2300℉
PL2C	PL-Ⅱ 0 to 1390℃	PL2F	PL-Ⅱ 0 to 2500℉
cC C	C(W/Re5-26) 0 to 2315℃	cC F	C(W/Re5-26) 0 to 4200℉
Pt .C	Pt100 -200.0 to 850.0℃	Pt .F	Pt100 -200.0 to 1000.0℉
JPt.C	JPt100 -200.0 to 500.0℃	JPt.F	JPt100 -200.0 to 900.0℉
PtC C	Pt100 -200 to 850℃	PtC F	Pt100 -300 to 1500℉
JPtC	JPt100 -200 to 500℃	JPtF	JPt100 -300 to 900℉
420A	4-20 mA DC -2000 to 10000 (Externally mounted 50 Ω shunt resistor)		
020A	0-20 mA DC -2000 to 10000 (Externally mounted 50 Ω shunt resistor)		
0 1V	0-1 V DC -2000 to 10000		
0 5V	0-5 V DC -2000 to 10000		
1 5V	1-5 V DC -2000 to 10000		
0 10V	0-10 V DC -2000 to 10000		
4201	4-20 mA DC -2000 to 10000 (Built-in 50 Ω shunt resistor)		
0201	0-20 mA DC -2000 to 10000 (Built-in 50 Ω shunt resistor)		

SrLH 10000	**Scaling high limit** • Setting range: Scaling low limit to Input range high limit (*)
SrLL -2000	**Scaling low limit** • Setting range: Input range low limit to Scaling high limit (*)
dP 0	**Decimal point place** • 0 : No decimal point 0.0 : 1 digit after decimal point 0.00 : 2 digits after decimal point 0.000 : 3 digits after decimal point
FILr 0.0	**PV filter time constant** • Setting range: 0.0 to 10.0 sec
AL 1F ----	**A1 type** • ----: No alarm action H : High limit alarm L : Low limit alarm H S : High limit with standby alarm L S: Low limit with standby alarm

(*) The placement of the decimal point follows the selection or input range.

Characters, Factory Default	Setting Item, Function, Setting Range
AL2F - - - -	**A2 type** • - - - -: No alarm action H□□□ : High limit alarm L□□□ : Low limit alarm H□□S : High limit with standby alarm L□□S : Low limit with standby alarm
AL3F - - - -	**A3 type** • - - - -: No alarm action H□□□ : High limit alarm L□□□ : Low limit alarm H□□S : High limit with standby alarm L□□S: Low limit with standby alarm SI d□: High/Low limit range alarm
AL4F - - - -	**A4 type** • - - - -: No alarm action H□□□ : High limit alarm L□□□ : Low limit alarm H□□S : High limit with standby alarm L□□S : Low limit with standby alarm SI d□: High/Low limit range alarm
A1LA nonL	**A1 Energized/De-energized** • nonL : Energized rEVS: De-energized
A2LA nonL	**A2 Energized/De-energized** • nonL : Energized rEVS: De-energized
A3LA nonL	**A3 Energized/De-energized** • nonL : Energized rEVS : De-energized
A4LA nonL	**A4 Energized/De-energized** • nonL : Energized rEVS : De-energized
A1HY □□ 1.0	**A1 hysteresis** • Setting range: 0.1 to 100.0℃ (℉) Direct current, DC voltage input: 1 to 1000 (*)
A2HY □□ 1.0	**A2 hysteresis** • Setting range: 0.1 to 100.0℃ (℉) Direct current, DC voltage input: 1 to 1000 (*)
A3HY □□ 1.0	**A3 hysteresis** • Setting range: 0.1 to 100.0℃ (℉) Direct current, DC voltage input: 1 to 1000 (*)
A4HY □□ 1.0	**A4 hysteresis** • Setting range: 0.1 to 100.0℃ (℉) Direct current, DC voltage input: 1 to 1000 (*)

(*) The placement of the decimal point follows the selection.

Characters, Factory Default	Setting Item, Function, Setting Range
A1dY 0	**A1 delay time** • Setting range: 0 to 9999 seconds
A2dY 0	**A2 delay time** • Setting range: 0 to 9999 seconds
A3dY 0	**A3 delay time** • Setting range: 0 to 9999 seconds
A4dY 0	**A4 delay time** • Setting range: 0 to 9999 seconds
TrH1 1370	**Transmission output 1 high limit** • Setting range: Transmission output 1 low limit to Input range high limit (*)
TrL1 -200	**Transmission output 1 low limit** • Setting range: Input range low limit to Transmission output 1 high limit (*)
TrH2 1370	**Transmission output 2 high limit** • Setting range: Transmission output 2 low limit to Input range high limit (*)
TrL2 -200	**Transmission output 2 low limit** • Setting range: Input range low limit to Transmission output 2 high limit (*)
HoLd HoLd	**Event input function** • HoLd (HOLD): PV at the given time is held and indicated by closing Event input terminals (14, 17). The HOLD function is cancelled by opening Event input terminals (14, 17). P_H (Peak HOLD): The updated maximum PV is indicated by closing Event input terminals (14, 17). The Peak HOLD function is cancelled by opening Event input terminals (14, 17). b_H (Bottom HOLD): The updated minimum PV is indicated by closing Event input terminals (14, 17). The Bottom HOLD function is cancelled by opening Event input terminals (14, 17). HLd1 (Alarm HOLD 1): If any of [A1 HOLD function] to [A4 HOLD function] is set to “Enabled”, and if the alarm is ON, the alarm will be maintained by closing Event input terminals (14, 17). The alarm HOLD function will be cancelled by opening Event input terminals (14, 17). While the Event input terminals (14, 17) are open, the alarm HOLD function will be disabled. HLd2 (Alarm HOLD 2)**:** If any of [A1 HOLD function] to [A4 HOLD function] is set to “Enabled”, and if the alarm is ON, the alarm will be maintained by opening Event input terminals (14, 17). The alarm HOLD function will be cancelled by closing Event input terminals (14, 17). While the Event input terminals (14, 17) are closed, the alarm HOLD function will be disabled.
A1Hd nonE	**A1 HOLD function** • nonE : Disabled HoLd : Enabled

(*) The placement of the decimal point follows the selection or input range.

Characters, Factory Default	Setting Item, Function, Setting Range
A2Hd nonE	**A2 HOLD function** • nonE : Disabled HoLd : Enabled
A3Hd nonE	**A3 HOLD function** • nonE : Disabled HoLd : Enabled
A4Hd nonE	**A4 HOLD function** • nonE : Disabled HoLd : Enabled
rooT nonE	**Square root function** • nonE : Disabled UnE□ : Enabled
LcUT □□ 1.0	**Low level cutoff** • Setting range: 0.0 to 25.0% of input range

10.4 Maintenance Mode

To enter Maintenance mode, press the UP and FAST keys (in that order) together for approx. 5 seconds in PV/SV Display Mode.

If the unit enters Maintenance mode, all outputs are forced to turn OFF.

Characters, Factory Default	Setting Item, Function
A□A1 oFF□	**A1 output ON/OFF** • oFF□ : Output OFF on□□ : Output ON
A□A2 oFF□	**A2 output ON/OFF** • oFF□ : Output OFF on□□ : Output ON
A□A3 oFF□	**A3 output ON/OFF** • oFF□ : Output OFF on□□ : Output ON
A□A4 oFF□	**A4 output ON/OFF** • oFF□ : Output OFF on□□ : Output ON
A□r1 □□0.0	**Transmission output 1 manual output** • Setting range: 0.0 to 100.0%
A□r2 □□0.0	**Transmission output 2 manual output** • Setting range: 0.0 to 100.0%

11. Key Operation Flowchart

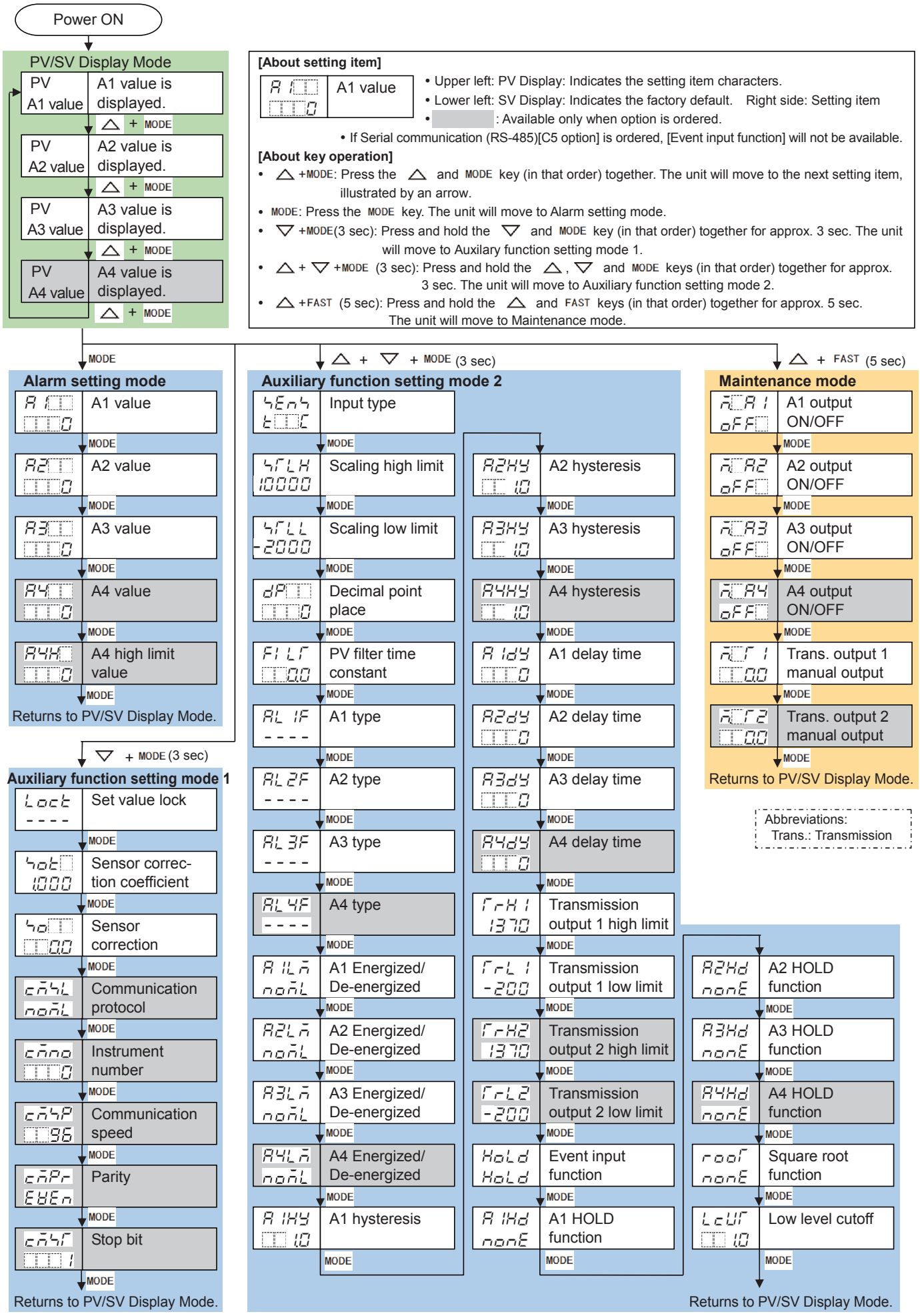

For any inquiries about this unit, please contact our agency or the vendor where you purchased the unit. Please provide your model and serial number.

(e.g.)

- Model ---------- JIR-301-M
- Serial number ----- No. 165F05000

In addition to the above, please let us know the details of the malfunction, or discrepancy, and the operating conditions.

SHINKO TECHNOS CO., LTD.

OVERSEAS DIVISION

Head Office : 2-5-1, Senbahigashi, Minoo, Osaka, Japan

URL: http://www.shinko-technos.co.jp/e/ Tel : +81-72-727-6100

E-mail: overseas@shinko-technos.co.jp Fax: +81-72-727-7006

No. JIR32E3 2019.02